GENERAL NOTES AND SPECIFICATIONS FOR DOUBLE SPAN GLAZING WALL SYSTEM:

1. DOUBLE SPAN PROFILIT™ K25/60/7 GLAZING WALL SYSTEM, SHOWN ON THIS PRODUCT EVALUATION DOCUMENT (P.E.D.) HAS BEEN VERIFIED FOR COMPLIANCE IN ACCORDANCE WITH THE 2023 (8th EDITION) OF THE FLORIDA BUILDING CODE. DOUBLE SPAN PROFILIT™ K25/60/7 GLAZING WALL SYSTEM SHALL NOT BE INSTALLED AT HIGH VELOCITY HURRICANE ZONES (MIAMI DADE/BROWARD COUNTY), NOR SHALL BE INSTALLED WITHIN WIND-BORNE DEBRIS REGIONS AS DEFINED BY SECTION 202 OF THE FLORIDA BUILDING CODE.

   DESIGN WIND LOADS SHALL BE DETERMINED AS PER SECTION 1609 OF THE ABOVE MENTIONED CODE. FOR A BASIC WIND SPEED AS REQUIRED BY THE JURISDICTION WHERE GLAZING WALL WILL BE INSTALLED WITH A DIRECTIONALITY FACTOR KD=0.85, USING ASCE 7-22 & SHALL NOT EXCEED THE MAXIMUM (A.S.D.) DESIGN PRESSURE RATING INDICATED ON NOTE 1.
   IN ORDER TO VERIFY THE ABOVE CONDITION, ULTIMATE DESIGN WIND LOADS DETERMINED PER ASCE 7-22 SHALL BE FIRST REDUCED TO A.S.D. DESIGN WIND LOADS BY MULTIPLYING THEM BY 0.6 IN ORDER TO COMPARE THESE W/ MAX. (A.S.D.) DESIGN PRESSURE RATING INDICATED ON NOTE 1.

   IN ORDER TO VERIFY THAT ANCHORS ON THIS P.E.D., AS TESTED, WERE NOT OVERSTRESSED, A 33% INCREASE IN ALLOWABLE STRESS FOR WIND LOADS WAS NOT USED IN THEIR ANALYSIS. FASTENERS SPACING TO WOOD HAS BEEN DETERMINED IN ACCORDANCE WITH N.D.S. 2018.
   THIS DOUBLE SPAN PROFILIT™ K25/60/7 GLAZING WALL SYSTEM'S ADEQUACY FOR WIND LOAD RESISTANCE HAS BEEN VERIFIED IN ACCORDANCE WITH SECTION 1709.5.2 & AAMA 501 (PER SECTION 1709.8.4) OF THE ABOVE MENTIONED CODE AS PER ASTM E-330 STANDARD AS PER ARCHITECTURAL TESTING LAB REPORT # 77709.01-120-32 AND AS PER SUBMITTED STRUCTURAL CALCULATIONS, PERFORMED AS PER SECTION 1604 OF THE FLORIDA BUILDING CODE.
   DOUBLE SPAN PROFILIT™ K25/60/7 GLAZING WALL SYSTEM IS ALSO VERIFIED FOR WATER AND AIR INFILTRATION AS PER ASTM E-547, E-331 AND E-283 STANDARDS RESPECTIVELY PER SECTION 1403.2 OF THE FLORIDA BUILDING CODE. GLASS VERIFIED PER ASTM E-1300, PER SECTION 2404.1 OF THE FLORIDA BULDING CODE.

MAX. A.S.D. DESIGN PRESSURE RATING : + 66, - 66 p.s.f.

2. ALL ALUMINUM EXTRUSIONS SHALL BE ALUMINUM ASSOCIATION 6063-T5 ALLOY AND TEMPER (UNLESS OTHERWISE NOTED), PER ASTM B221, WITH Fy = 16.0 ksi MINIMUM. THE THICKNESS OF ALL EXTRUSIONS SHALL BE AS SHOWN ON THIS DRAWING.

3. TEMPERED GLASS TO COMPLY WITH 16CFR 1201.

4. ALL ALUMINUM IN CONTACT WITH DISSIMILAR METALS SHALL COMPLY WITH SECTION III-6 OF THE 2020 ALUMINUM DESIGN MANUAL.

5. ALL INTERNAL SCREWS USED FOR ASSEMBLY AT HEAD, SILL AND FRAME JAMBS CONNECTIONS (METAL TO METAL) TO BE AISI STAINLESS STEEL 304 OR 316 AISI SERIES OR CORROSION RESISTANT COATED CARBON STEEL AS PER DIN 50018 WITH MINIMUM 50 KSI YIELD STRENGTH AND 90 KSI TENSILE STRENGTH & SHALL COMPLY W/ FLORIDA BUILDING CODE SECTION 2411.3.3.4.

6. ANCHORS FOR FRAME CONNECTION TO EXISTING STRUCTURE SHALL BE AS FOLLOWS: (SEE TYPICAL ELEVATION ON SHEET 14 FOR ALLOWED SUBSTRATES)

   (A) TO EXISTING POURED CONCRETE: (MIN. F'C = 2899 PSI)
   - 5/16"ø TAPCON ANCHORS W/ 2 1/4" MIN. EMBEDMENT BEYOND ANY WALL/SLAB FINISH MATERIAL & MIN. 3 1/8" EDGE DISTANCE, AS MANUFACTURED BY ITW. BUILDEX, INC.

   (B) TO EXISTING CONCRETE BLOCK WALL: (MIN. ASTM C-90 UNIT)
   - 5/16"ø TAPCON ANCHORS W/ 1 1/4" MIN. EMBEDMENT BEYOND ANY WALL/SLAB FINISH MATERIAL & MIN. 3 1/8" EDGE DISTANCE, AS MANUFACTURED BY ITW BUILDEX, INC.

   (C) TO EXISTING ALUMINUM (6063-T5 ALLOY), 1/8" MIN. THICKNESS:
   - 5/16"øX3" DRILL-FLEX, INC. & MIN. 3/4" EDGE DISTANCE AS MANUFACTURED BY ELCO CONSTRUCTION PRODUCTS.

   (D) TO EXISTING MIN. 12 GAGE STEEL MEMBER (ASTM A-500, A-653 OR A-36).
   - 5/16"øX3" DRILL-FLEX & MIN. 1" EDGE DISTANCE AS MANUFACTURED BY ELCO CONSTRUCTION PRODUCTS.

   (E) TO EXISTING 2X P.T. WOOD BUCK (G=0.55).
   - 5/16"ø TAPCON WITH 1 1/2" MIN. PENETRATION & MIN. 1 1/4" EDGE DISTANCE, AS MANUFACTURED BY ITW BUILDEX, INC.

7. ANCHORS SHALL BE INSTALLED FOLLOWING ALL OF THE RECOMMENDATIONS AND SPECIFICATIONS OF THE ANCHOR'S MANUFACTURER.

8. WOOD BUCKS BY OTHERS, MUST BE ANCHORED PROPERLY TO TRANSFER LOADS TO THE BUILDING STRUCTURE. WOOD BUCKS MUST BE SOUTHERN PINE, G = 0.55.

9. DOUBLE SPAN PROFILIT™ K25/60/7 GLAZING WALL SYSTEM INSTALLATION SHALL ONLY BE PERFORMED INTO EXISTING STRUCTURE CONSISTING OF POURED CONCRETE, CONCRETE BLOCK WALL, 1/8" Min. THICK ALUMINUM, 12 GAGE STEEL OR 2"x PT WOOD FRAME STRUCTURE AND SHALL COMPLY WITH SECTION 2411.3.3.3 OF THE FLORIDA BUILDING CODE AND WITH SPECS INDICATED IN THIS DRAWING PLUS ANY BUILDING AND ZONING REGULATIONS PROVIDED BY THE JURISDICTION WHERE PERMIT IS APPLIED TO.

10. PROVIDE 3/8" MAX. BEARING SHIM SPACE (TYP.).

11. ALL WELDING OF ALUMINUM COMPONENTS, AS APPLICABLE, TO CONFORM WITH THE AMERICAN WELDING SOCIETY STRUCTURAL STANDARD AND THE AMERICAN WELDING SOCIETY AWS D1.2. USE CERTIFIED WELDERS. USE ER-4043 OR 5356 ELECTRODES.

12. PROVIDE DOW 795 SEALANT (TYP.) AT ALL FRAME AND GLASS JOINTS.

13. REMAINING COMPONENTS FOR THIS DOUBLE SPAN PROFILIT™ K25/60/7 GLAZING WALL SYSTEM SHALL BE AS INDICATED ON BILL OF MATERIALS, SHEET 3 OF THIS DRAWING.

14. THIS SYSTEM IS PATENT PENDING. COMPONENTS OF THIS APPROVAL ARE COVERED, IN WHOLE OR IN PART BY U.S. PATENT ISSUED TO TECHNICAL GLASS PRODUCTS.

15. DOUBLE SPAN PROFILIT™ K25/60/7 GLAZING WALL SYSTEM'S INSTALLATION SHALL COMPLY WITH SPECS INDICATED IN THIS DRAWING PLUS ANY BUILDING AND ZONING REGULATIONS PROVIDED BY THE JURISDICTION WHERE PERMIT IS APPLIED TO.

16. PRODUCT MANUFACTURER'S LABEL SHALL BE LOCATED ON A READILY VISIBLE LOCATION IN ACCORDANCE WITH SECTION 1709.5 OF FLORIDA BUILDING CODE.
    ONE LABEL SHALL BE PLACED FOR EVERY OPENING.

17. (A) THIS PRODUCT EVALUATION DOCUMENT (P.E.D.) PREPARED BY THIS ENGINEER IS GENERIC AND DOES NOT PROVIDE INFORMATION FOR A SITE SPECIFIC PROJECT; I. E. WHERE THE SITE CONDITIONS DEVIATE FROM THE P. E. D.

    (B) CONTRACTOR TO BE RESPONSIBLE FOR THE SELECTION, PURCHASE AND INSTALLATION INCLUDING LIFE SAFETY OF THIS PRODUCT, BASED ON THIS PRODUCT EVALUATION DOCUMENT (P.E.D.), PROVIDED HE/SHE DOES NOT DEVIATE FROM THE CONDITIONS DETAILED ON THIS DOCUMENT. CONSTRUCTION SAFETY AT SITE IS THE CONTRACTOR'S RESPONSIBILITY.

    (C) THIS PRODUCT EVALUATION DOCUMENT (P.E.D.) WILL BE CONSIDERED INVALID IF ALTERED BY ANY MEANS.

    (D) SITE SPECIFIC PROJECTS SHALL BE PREPARED BY A FLORIDA REGISTERED ENGINEER OR ARCHITECT WHICH WILL BECOME THE ENGINEER OF RECORD (E.O.R.) FOR THE PROJECT AND WHO WILL BE RESPONSIBLE FOR THE PROPER USE OF THE P.E.D. ENGINEER OF RECORD, ACTING AS A DELEGATED ENGINEER TO THE P.E.D. ENGINEER, SHALL SUBMIT TO THIS LATTER THE SITE SPECIFIC DRAWINGS FOR REVIEW.

    (E) ORIGINAL P.E.D. SHALL BEAR THE DATE AND ORIGINAL SEAL AND SIGNATURE OF THE PROFESSIONAL ENGINEER OF RECORD THAT PREPARED IT.

THIS DRAWING SHALL ONLY BE USED TO OBTAIN PERMITS IN THE STATE OF FLORIDA

(Non Wind Borne Debris Regions)
Florida Building Code (Non High Velocity Hurricane Zone)

WALTER A. TILLIT JR. LICENSE No. 44167 STATE OF FLORIDA PROFESSIONAL ENGINEER
7/14/2023
P.E. SEAL/SIGNATURE/DATE

© 2023 TILTECO INC.

TILTECO INC.
TILLIT TESTING & ENGINEERING COMPANY
6355 N.W. 36th. St., Ste. 305, VIRGINIA GARDENS, Fl. 33166
Phone : (305)871-1530 . Fax : (305)871-1531
e-mail: tilteco@aol.com
CA-0006719
WALTER A. TILLIT Jr. P.E.
FLORIDA Lic. # 44167

DOUBLE SPAN PROFILIT™ K25/60/7, GLAZING WALL SYSTEM

Technical Glass Products
8107 Bracken PL SE
Snoqualmie, WA 98065-9258
Phone: 1-800-426-0279
(425) 822-4514
Fax: 1-800-451-9857
(425) 822-4684

REV. No	DESCRIPTION	DATE	REV. No	DESCRIPTION	DATE
1	OLD 20-257	7/14/23	3		
2	–	–			

DRAWN BY Y.M.

7/14/2023 DATE

23-091 DRAWING No

SHEET 1 OF 19

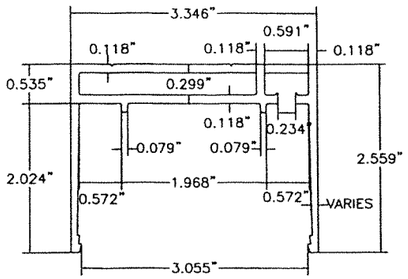

① HEADER
(6063-T5 ALLOY)
980-WT

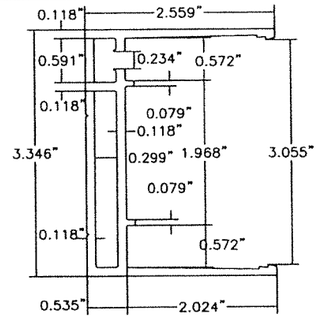

② JAMB
(6063-T5 ALLOY)
980-WT

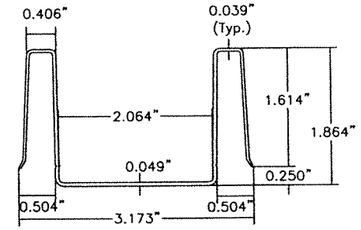

③ HEADER VINYL INSERT
980-2

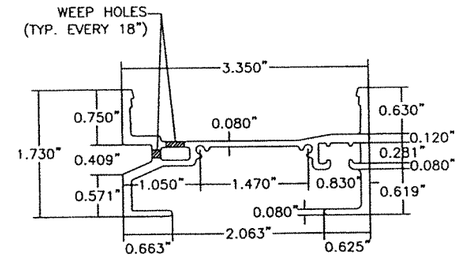

④ SILL
(6063-T5 ALLOY)
991-WT-R

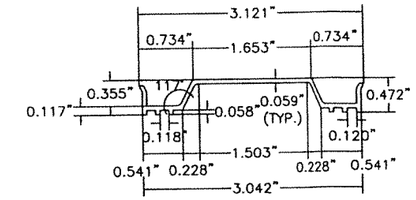

⑤ SILL VINYL INSERT
P.N. 981-2

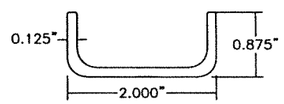

⑥ 4" LONG U CHANNEL
@ SILL ANCHOR
(5005-H32 ALLOY)

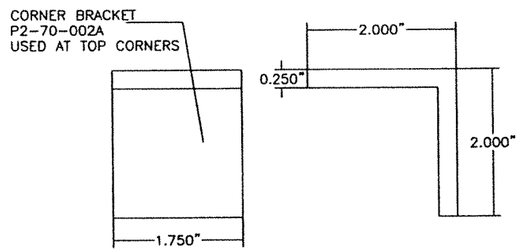

⑦ TOP CORNER BRACKET
(6063-T5 ALLOY)
P2-70-002A

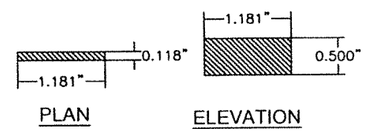

⑧ VINIL GLASS SHIM
PN41-044

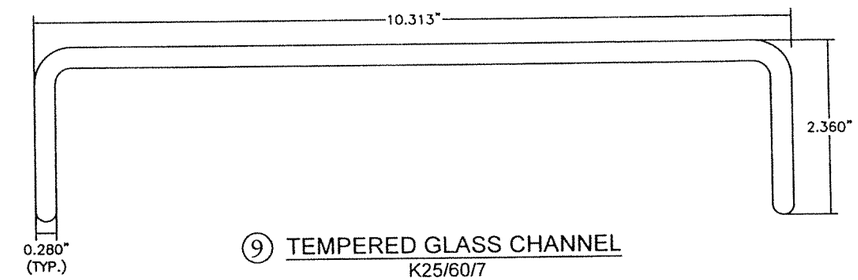

⑨ TEMPERED GLASS CHANNEL
K25/60/7

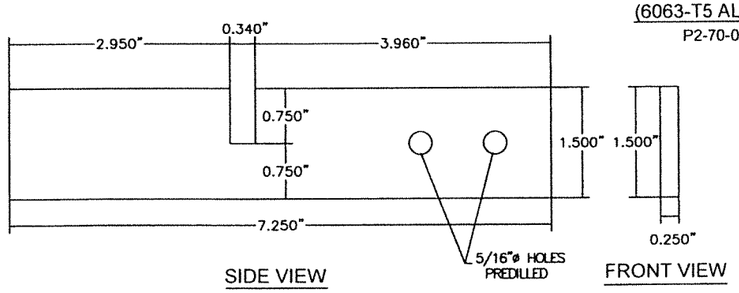

⑩ WIND ANCHOR
(6063-T5 ALLOY)
70-030

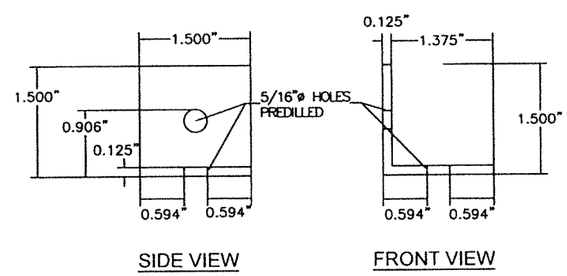

⑪ WIND ANCHOR MOUNTING
BRACKET FOR ⑩
(6063-T5 ALLOY)
70-032

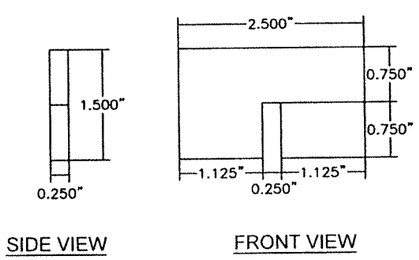

⑫ INTERIOR WIND ANCHOR BACKUP
PLATE FOR ⑩
(6063-T5 ALLOY)
70-031

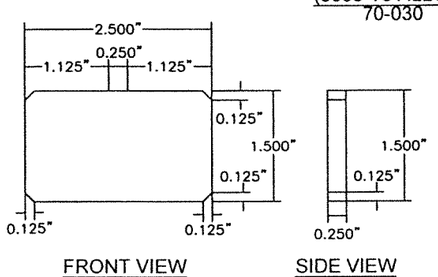

⑬ EXTERIOR WIND ANCHOR
BACKUP PLATE FOR ⑩
(6063-T5 ALLOY)
70-031

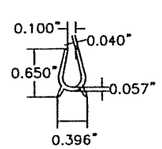

⑯ GASKET
166-WC

COMPONENTS
FOR DOUBLE SPAN GLAZING SYSTEM

SCALE: 1" = 1½"

(Non Wind Borne Debris Regions)
Florida Building Code (Non High Velocity Hurricane Zone)

WALTER A. TILLIT JR. LICENSE No. 44167 STATE OF FLORIDA PROFESSIONAL ENGINEER

7/14/2023

P.E. SEAL/SIGNATURE/DATE

© 2023 TILTECO INC.

TILTECO INC.
TILLIT TESTING & ENGINEERING COMPANY
6355 N.W. 36th. St., Ste. 305, VIRGINIA GARDENS, Fl. 33166
Phone : (305)871-1530 . Fax : (305)871-1531
e-mail: tilteco@aol.com
CA-0006719
WALTER A. TILLIT Jr. P.E.
FLORIDA Lic. # 44167

DOUBLE SPAN PROFILIT™ K25/60/7,
GLAZING WALL SYSTEM

Technical Glass Products
8107 Bracken PL SE
Snoqualmie, WA 98065-9258
Phone: 1-800-426-0279
(425) 822-4514
Fax: 1-800-451-9857
(425) 822-4684

REV. No	DESCRIPTION	DATE	REV. No	DESCRIPTION	DATE
1	OLD 20-257	7/14/23	3		
2	–	–			

DRAWN BY
Y.M.

7/14/2023
DATE

23-091
DRAWING No

SHEET 2 OF 19

BILL OF MATERIALS FOR DOUBLE SPAN GLAZING WALL SYSTEM:

ITEM	DESCRIPTION	MATERIAL / MANUFACTURER	REMARKS
1	HEADER	6063-T5 ALUMINUM ALLOY	980 WT
2	JAMB	6063-T5 ALUMINUM ALLOY	980 WT
3	HEADER INSERT	AAMA APPROVED VINYL BY CUSTOM WINDOW EXTRUSIONS INC. OR KARL PETER KUNSTSTOFFE GMBH.	980-2 PIECES OF 9" LONG W/ 2 3/32" SEPARATION AT CHANNEL GLASS JOINTS TO FIT (2) 8 THROUGHOUT
4	SILL	6063-T5 ALUMINUM ALLOY	991-WT-R, PROVIDE 1"x1/4" WEEP HOLES AT 36" AND OTHER 6" FROM EACH END.
5	SILL INSERT	AAMA APPROVED VINYL BY CUSTOM WINDOW EXTRUSIONS INC. OR KARL PETER KUNSTSTOFFE GMBH.	P.N. 981-2 PIECES OF 8 3/4" LONG W/ 1 3/4" SEPARATION AT CHANNEL GLASS JOINTS TO FIT (2) 8 THROUGHOUT
6	4" LONG "U" CHANNEL AT SILL ANCHOR	5005-H32 ALUMINUM ALLOY	PIECES OF 4" LONG, PLACED AT CENTER OF ANCHORS AT SILL
7	TOP CORNER BRACKET	6063-T5 ALUMINUM ALLOY	2"x2"x.0.25"x 1.75" LONG ALUM. ANGLE, PLACED AT EACH TOP CORNER.
8	VINYL GLASS SHIM	AAMA APPROVED VINYL BY CUSTOM WINDOW EXTRUSIONS INC. OR KARL PETER KUNSTSTOFFE GMBH.	P.N.41-044 USE DOUBLE @ FRONT & BACK AT TOP/BOTTOM AT CHANNEL GLASS 9 JOINTS
9	CHANNEL GLASS	0.28" THICK STANDARD CAST TEMPERED GLASS TYPE 1, CLASS 1, ROLLED GLASS, CHANNEL SHAPE	K-25/60/7 MODEL/SERIES GLASS
10	WIND ANCHOR	6063-T5 ALUMINUM ALLOY	70-030, PIECES OF 7.250" LONG, PLACED AT INTERIOR SIDE, BETWEEN CHANNELS GLASS 9, WITH A MINIMUM SEPARATION OF 3/8" BETWEEN CHANNELS 9 AND LOCATED 10'-0" MAX. FROM SILL.
11	WIND ANCHOR MOUNTING BRACKET	6063-T5 ALUMINUM ALLOY	70-032, (2)1.500"x1.500"x.0.125"x 1.500" LONG ALUM. ANGLES, PLACED AT INTERIOR END OF 10 WIND ANCHOR, EACH SIDE.
12	INTERIOR WIND ANCHOR BACKUP PLATE	6063-T5 ALUMINUM ALLOY	70-031, 2.500"x.0.250"x 1.500" LONG ALUM. PLATE, PLACED AT INTERIOR OF CHANNEL GLASS SYSTEM THRU 10
13	EXTERIOR WIND ANCHOR BACKUP PLATE	6063-T5 ALUMINUM ALLOY	70-031, 2.500"X.0.250"x 1.500" LONG ALUM. PLATE, PLACED AT EXTERIOR SIDE OF CHANNEL GLASS 9 WELDED TO 10 (FULL HEIGHT)
14	SILICONE SEALANT	DOW CORNING 795	AT GLASS & FRAME INTERIOR AND EXTERIOR SIDES
15	BUMPON ROLL STOCK CUSHION	3M SJ5632-3M BUMPON PROTECTIVE PRODUCT-RESILIENT 70 DUROMETER CLEAR POLYURETHANE SHEET WITH AN ACRYLIC ADHESIVE. COLOR CLEAR. TAPE CONSTRUCTION, BACKING FACESTOCK-CLEAR POLYURETHANE. TAPE CONSTRUCTION, CALIPER MILS (mm)-31 (0.8). PRODUCT HARDNESS ASTM D-2240-70 SHORE A. ADHESIVE TYPE AND THICKNESS MILLS (mm)-ACRYLIC (A-20) 1.0 (0.03). LINER TYPE AND THICKNESS MILS (mm)-80# PAPER1 4.8 (0.12). ADHESION TO STEEL oz./0.5 IN-25.	THE BUMPON ROLL ON CUSHION IS PLACED BETWEEN 12 AND CHANNEL GLASS EACH JOINT
16	GASKET	BUNZL EXTRUSION TACOMA, INC.	166-WC USE (1) PER EACH 8 JOINT FLEXIBLE PVC
17	5/16"ø TAPCON ANCHOR	I.T.W. BUILDEX, INC	AT POURED CONCRETE OR WOOD SILL AND HEAD, AND POURED CONCRETE, WOOD OR CONCRETE BLOCK JAMBS (2 REQUIRED), SEE SCHEDULE FOR ANCHOR SPACING ON SHEET 4 AND GENERAL NOTES 5A/1, 5B/1 AND 5E/1.
18	5/16"ø DRILL-FLEX SELF-DRILLING FASTENERS	ELCO CONSTRUCTION PRODUCTS	(2) AT METAL JAMBS LOCATED 10' - 0" MAX. FROM SILL, STAGGERED AND AT HEAD. SEE SCHEDULE FOR ANCHOR SPACING ON SHEET 4 AND GENERAL NOTES 5C/1 AND 5D/1.

(Non Wind Borne Debris Regions)
Florida Building Code (Non High Velocity Hurricane Zone)

WALTER A. TILLIT JR. LICENSE No. 44167 STATE OF FLORIDA PROFESSIONAL ENGINEER

7/14/2023

P.E. SEAL/SIGNATURE/DATE

© 2023 TILTECO INC.

TILTECO INC.
TILLIT TESTING & ENGINEERING COMPANY
6355 N.W. 36th. St., Ste. 305, VIRGINIA GARDENS, Fl. 33166
Phone : (305)871-1530 . Fax : (305)871-1531
e-mail: tilteco@aol.com
CA-0006719
WALTER A. TILLIT Jr. P.E.
FLORIDA Lic. # 44167

DOUBLE SPAN PROFILIT™ K25/60/7, GLAZING WALL SYSTEM

Technical Glass Products
8107 Bracken PL SE
Snoqualmie, WA 98065-9258
Phone: 1-800-426-0279
(425) 822-4514
Fax: 1-800-451-9857
(425) 822-4684

REV. No	DESCRIPTION	DATE	REV. No	DESCRIPTION	DATE
1	OLD 20-257	7/14/23	3		
2	--	--			

DRAWN BY Y.M.

7/14/2023 DATE

23-091 DRAWING No

SHEET 3 OF 19

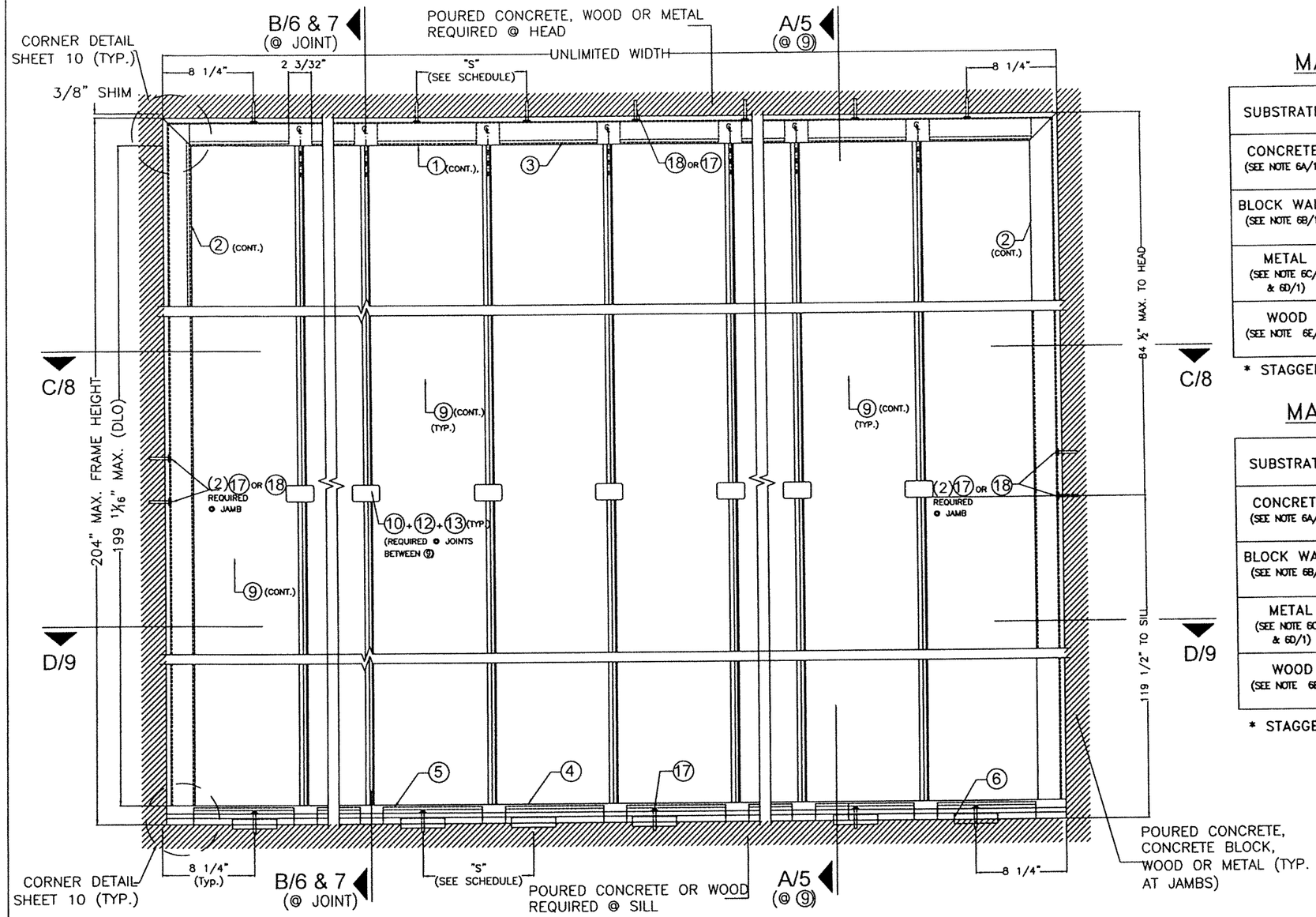

TYPICAL EXTERIOR ELEVATION FOR DOUBLE SPAN GLAZING SYSTEM

SCALE: 3/32" = 1"

MAXIMUM ANCHOR SPACING "S" SCHEDULE

SUBSTRATE	ANCHOR TYPE	MAX. A.S.D. DESIGN PRESSURE RATING (PSF)	HEAD	SILL	JAMB
CONCRETE (SEE NOTE 6A/1)	5/16"ø TAPCON 17	+50, −50 p.s.f.	10" O.C.	5" O.C.	(2) ANCHORS @ 3 3/8" O.C. *
BLOCK WALL (SEE NOTE 6B/1)	5/16"ø TAPCON 17		10" O.C.	N/A	(2) ANCHORS @ 3 3/8" O.C. *
METAL (SEE NOTE 6C/1 & 6D/1)	5/16"ø−24 x 3" DRILL−FLEX 18		10" O.C.	N/A	(2) ANCHORS @ 3 3/8" O.C. *
WOOD (SEE NOTE 6E/1)	5/16"ø TAPCON 17		7 1/2" O.C.	5" O.C.	(2) ANCHORS @ 3 3/8" O.C. *

* STAGGERED

MAXIMUM ANCHOR SPACING "S" SCHEDULE

SUBSTRATE	ANCHOR TYPE	MAX. A.S.D. DESIGN PRESSURE RATING (PSF)	HEAD	SILL	JAMB
CONCRETE (SEE NOTE 6A/1)	5/16"ø TAPCON 17	+66, −66 p.s.f.	9 1/2" O.C.	4" O.C.	(2) ANCHORS @ 3 3/8" O.C. *
BLOCK WALL (SEE NOTE 6B/1)	5/16"ø TAPCON 17		9 1/2" O.C.	N/A	(2) ANCHORS @ 3 3/8" O.C. *
METAL (SEE NOTE 6C/1 & 6D/1)	5/16"ø−24 x 3" DRILL−FLEX 18		9 1/2" O.C.	N/A	(2) ANCHORS @ 3 3/8" O.C. *
WOOD (SEE NOTE 6E/1)	5/16"ø TAPCON 17		5 1/2" O.C.	4" O.C.	(2) ANCHORS @ 3 3/8" O.C. *

* STAGGERED

(Non Wind Borne Debris Regions)
Florida Building Code (Non High Velocity Hurricane Zone)

WALTER A. TILLIT JR. LICENSE No. 44167 STATE OF FLORIDA PROFESSIONAL ENGINEER

7/14/2023

P.E. SEAL/SIGNATURE/DATE

© 2023 TILTECO INC.

TILTECO INC.
TILLIT TESTING & ENGINEERING COMPANY
6355 N.W. 36th. St., Ste. 305, VIRGINIA GARDENS, FL 33166
Phone : (305)871-1530 . Fax : (305)871-1531
e-mail: tilteco@aol.com
CA-0006719
WALTER A. TILLIT Jr. P.E.
FLORIDA Lic. # 44167

DOUBLE SPAN PROFILIT™ K25/60/7,
GLAZING WALL SYSTEM

Technical Glass Products
8107 Bracken PL SE
Snoqualmie, WA 98065-9258
Phone: 1-800-426-0279
(425) 822-4514
Fax: 1-800-451-9857
(425) 822-4684

REV. No	DESCRIPTION	DATE	REV. No	DESCRIPTION	DATE
1	OLD 20-257	7/14/23	3		
2	–	–			

DRAWN BY
Y.M.

7/14/2023
DATE

23-091
DRAWING No

SHEET 4 OF 19

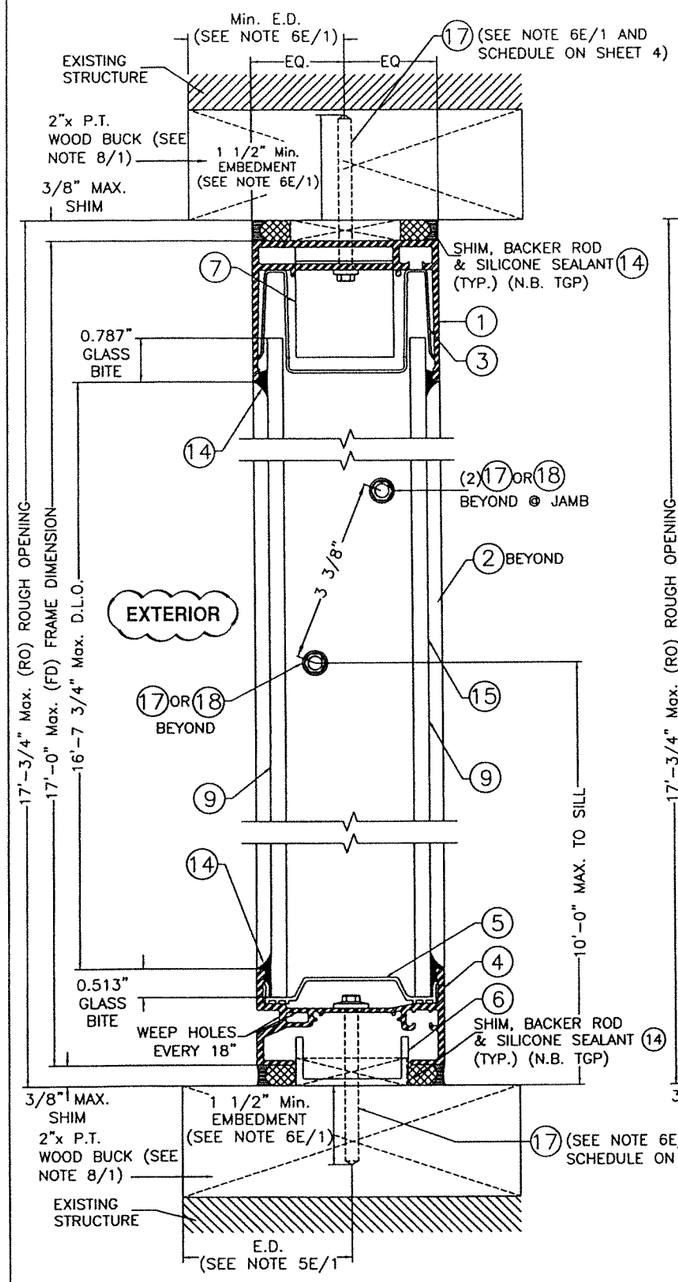

SECTION A-A
(TO WOOD)
SCALE: 3/8" = 1"

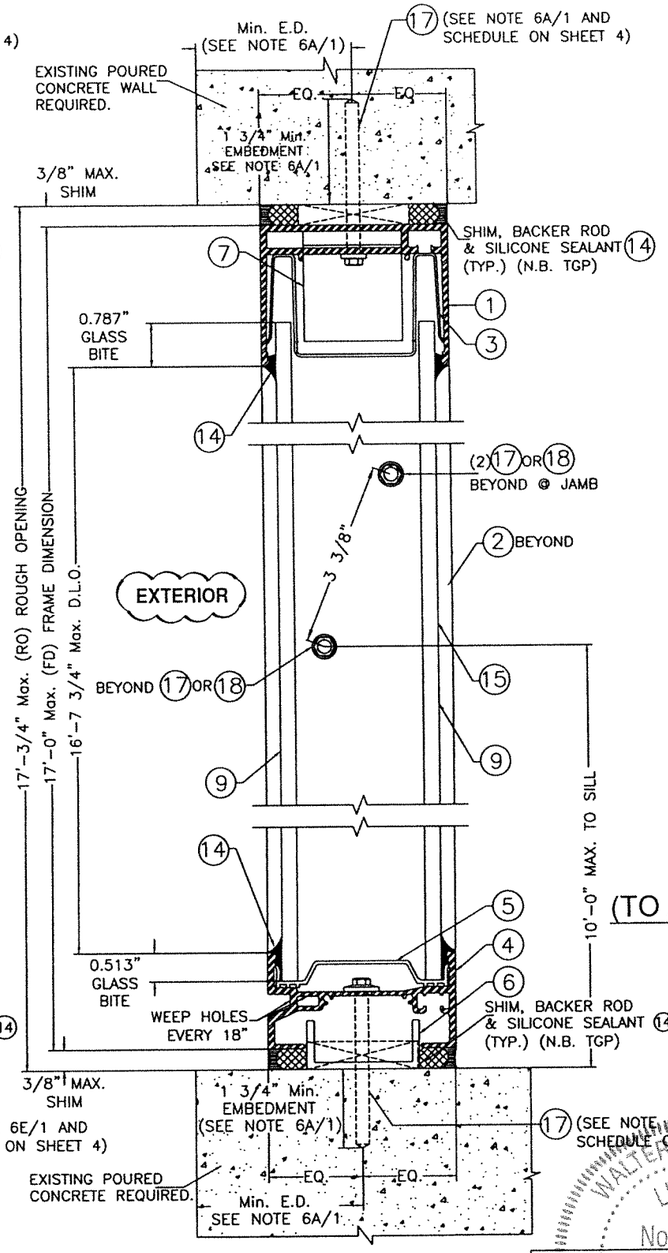

SECTION A-A
(TO POURED CONCRETE)
SCALE: 3/8" = 1"

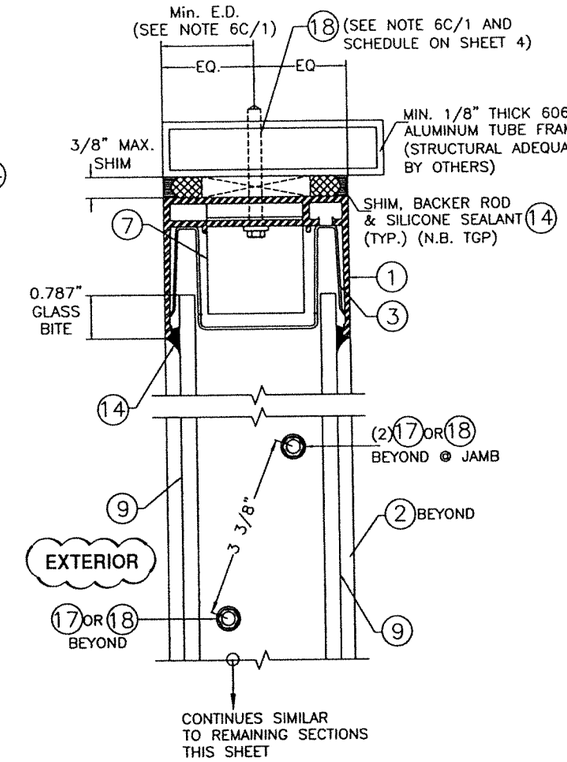

SECTION A-A
(TO ALUMINUM MULLION ONLY AT TOP)
SCALE: 3/8" = 1"

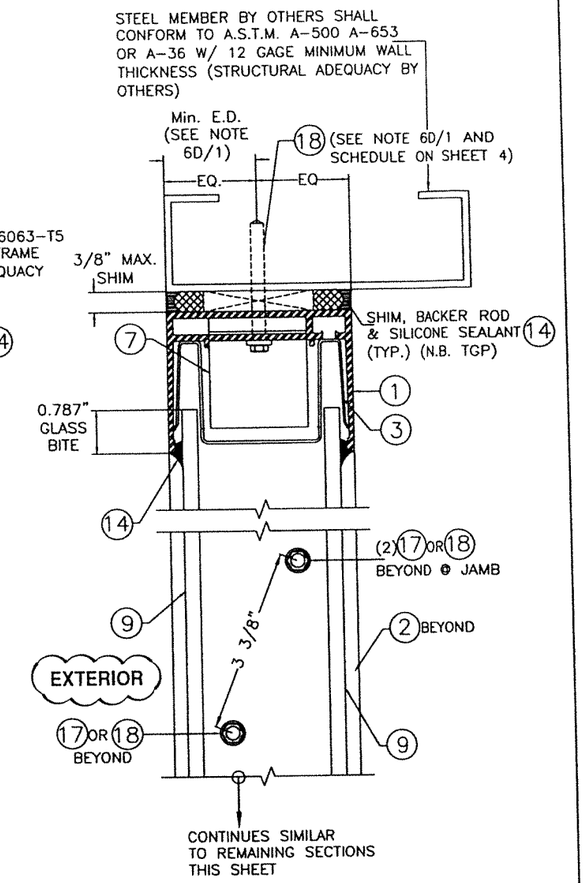

SECTION A-A
(TO STEEL MEMBER ONLY AT TOP)
SCALE: 3/8" = 1"

(Non Wind Borne Debris Regions)
Florida Building Code (Non High Velocity Hurricane Zone)

WALTER A. TILLIT JR. LICENSE No. 44167 STATE OF FLORIDA PROFESSIONAL ENGINEER
7/14/2023

P.E. SEAL/SIGNATURE/DATE

© 2023 TILTECO INC.

TILTECO INC.
TILLIT TESTING & ENGINEERING COMPANY
6355 N.W. 36th. St., Ste. 305, VIRGINIA GARDENS, FL 33166
Phone : (305)871-1530 . Fax : (305)871-1531
e-mail: tilteco@aol.com
CA-0006719
WALTER A. TILLIT Jr. P.E.
FLORIDA Lic. # 44167

DOUBLE SPAN PROFILIT™ K25/60/7, GLAZING WALL SYSTEM

Technical Glass Products
8107 Bracken PL SE
Snoqualmie, WA 98065-9258
Phone: 1-800-426-0279
(425) 822-4514
Fax: 1-800-451-9857
(425) 822-4684

REV. No	DESCRIPTION	DATE	REV. No	DESCRIPTION	DATE
1	OLD 20-257	7/14/23	3		
2	–	–			

DRAWN BY Y.M.

7/14/2023 DATE

23-091 DRAWING No

SHEET 5 OF 19

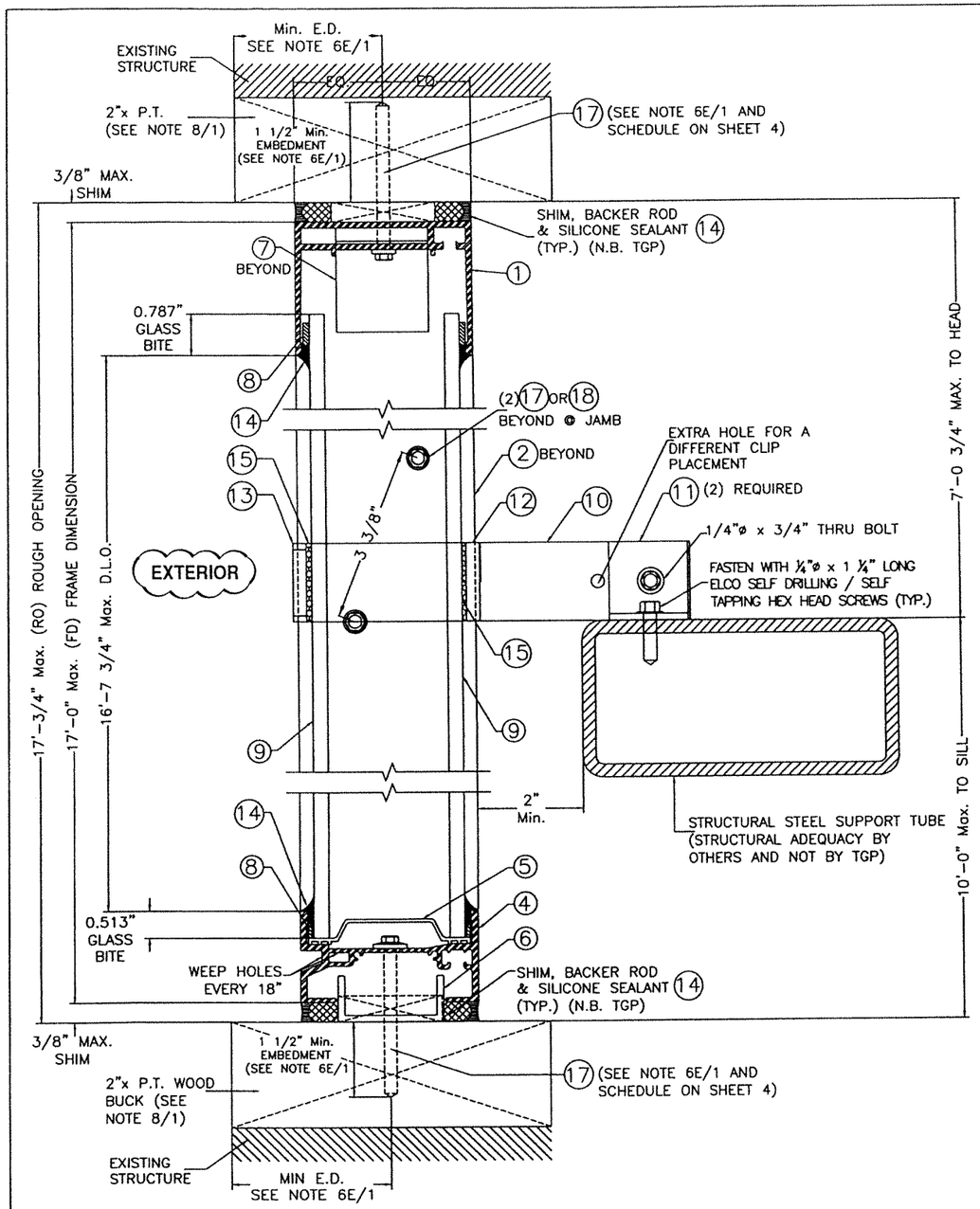

SECTION B-B

AT JOINT BETWEEN 9 & 9

SCALE: 3/8" = 1"

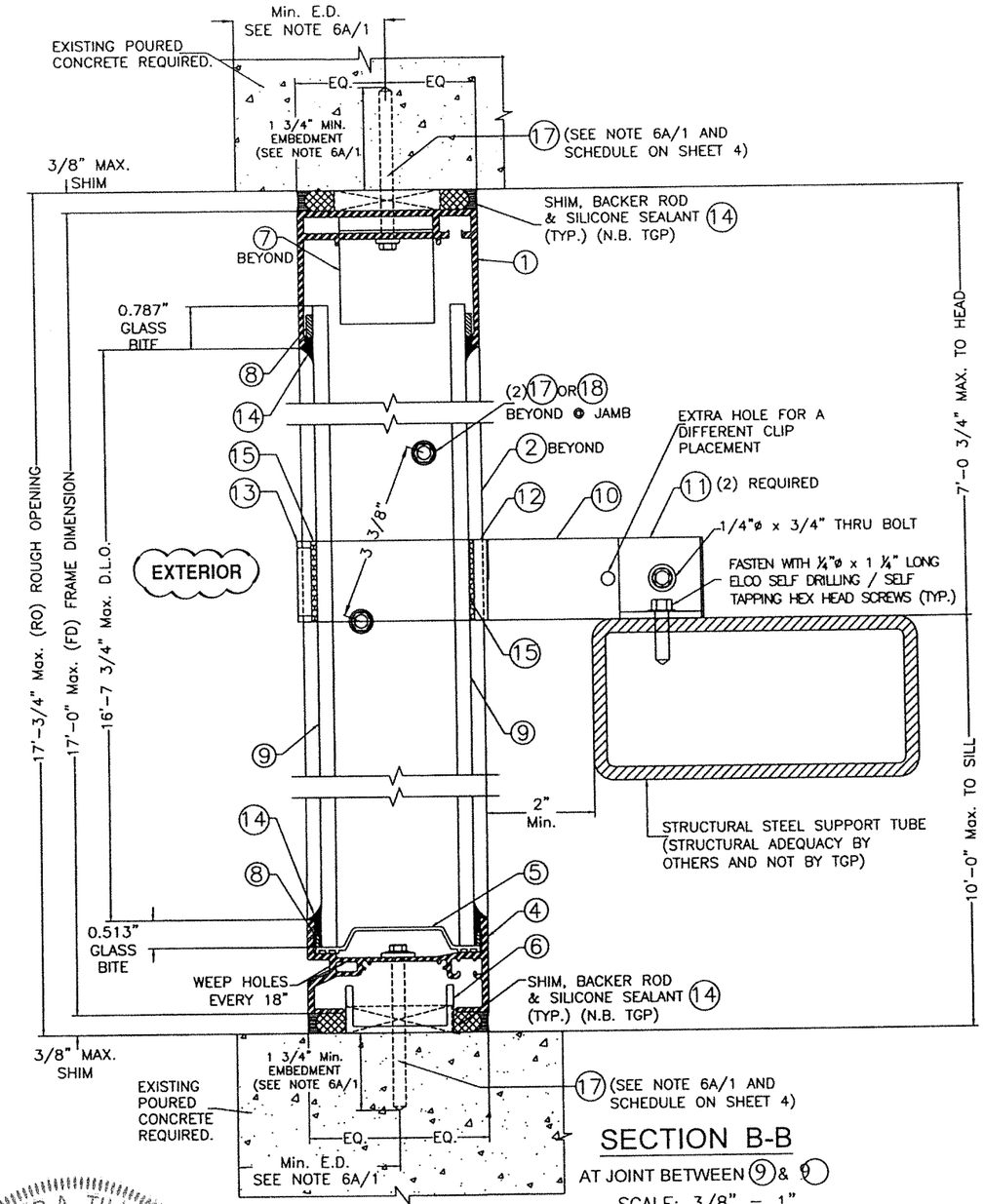

SECTION B-B

AT JOINT BETWEEN 9 & 9

SCALE: 3/8" = 1"

(Non Wind Borne Debris Regions)
Florida Building Code (Non High Velocity Hurricane Zone)

WALTER A. TILLIT JR. LICENSE No. 44167 STATE OF FLORIDA PROFESSIONAL ENGINEER

7/14/2023

P.E. SEAL/SIGNATURE/DATE

© 2023 TILTECO INC.

TILTECO INC.
TILLIT TESTING & ENGINEERING COMPANY
6355 N.W. 36th. St., Ste. 305, VIRGINIA GARDENS, Fl. 33166
Phone : (305)871-1530 . Fax : (305)871-1531
e-mail: tilteco@aol.com
CA-0006719
WALTER A. TILLIT Jr. P.E.
FLORIDA Lic. # 44167

DOUBLE SPAN PROFILIT™ K25/60/7, GLAZING WALL SYSTEM

Technical Glass Products
8107 Bracken PL SE
Snoqualmie, WA 98065-9258
Phone: 1-800-426-0279
(425) 822-4514
Fax: 1-800-451-9857
(425) 822-4684

REV. No	DESCRIPTION	DATE	REV. No	DESCRIPTION	DATE
1	OLD 20-257	7/14/23	3		
2	–	–			

DRAWN BY Y.M.

7/14/2023 DATE

23-091 DRAWING No

SHEET 6 OF 19

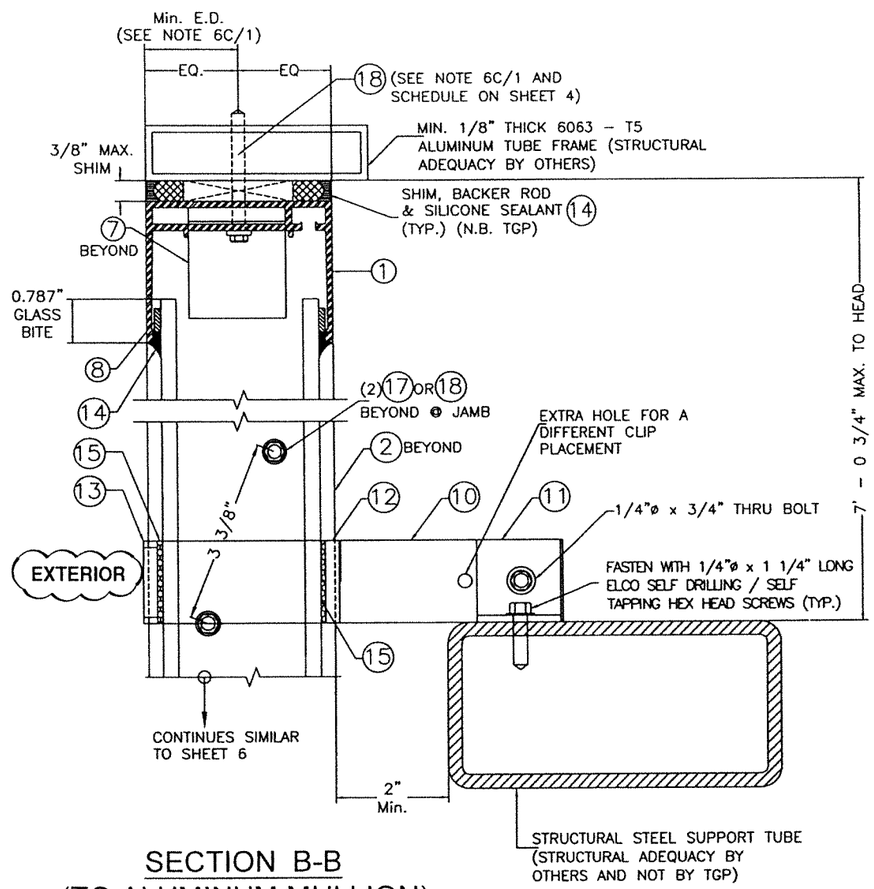

SECTION B-B
(TO ALUMINUM MULLION)

AT JOINT BETWEEN 9 & 9

SCALE: 3/8" = 1"

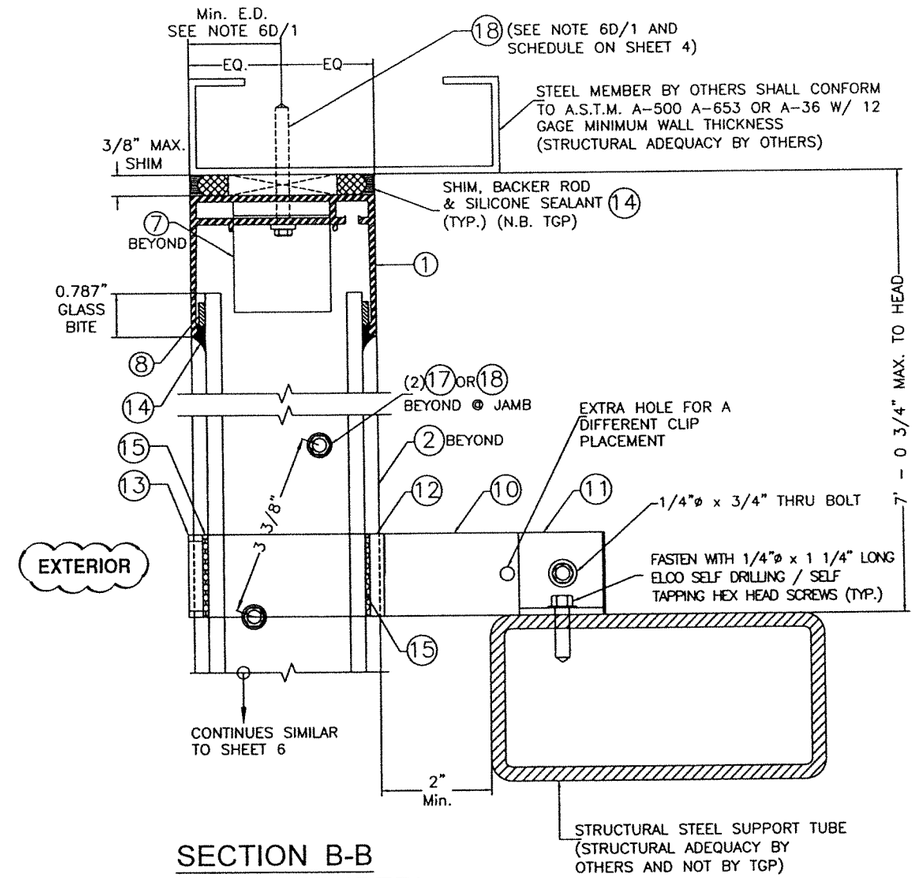

SECTION B-B
(TO STEEL MEMBER)

AT JOINT BETWEEN 9 & 9

SCALE: 3/8" = 1"

(Non Wind Borne Debris Regions)
Florida Building Code (Non High Velocity Hurricane Zone)

WALTER A. TILLIT JR. LICENSE No. 44167 STATE OF FLORIDA PROFESSIONAL ENGINEER

7/14/2023

P.E. SEAL/SIGNATURE/DATE

© 2023 TILTECO INC.

TILTECO INC.
TILLIT TESTING & ENGINEERING COMPANY
6355 N.W. 36th. St., Ste. 305, VIRGINIA GARDENS, Fl. 33166
Phone : (305)871-1530 . Fax : (305)871-1531
e-mail: tilteco@aol.com
CA-0006719
WALTER A. TILLIT Jr. P.E.
FLORIDA Lic. # 44167

DOUBLE SPAN PROFILIT™ K25/60/7, GLAZING WALL SYSTEM

Technical Glass Products
8107 Bracken PL SE
Snoqualmie, WA 98065-9258
Phone: 1-800-426-0279
(425) 822-4514
Fax: 1-800-451-9857
(425) 822-4684

REV. No	DESCRIPTION	DATE	REV. No	DESCRIPTION	DATE
1	OLD 20-257	7/14/23	3		
2	–	–			

DRAWN BY Y.M.

7/14/2023 DATE

23-091 DRAWING No

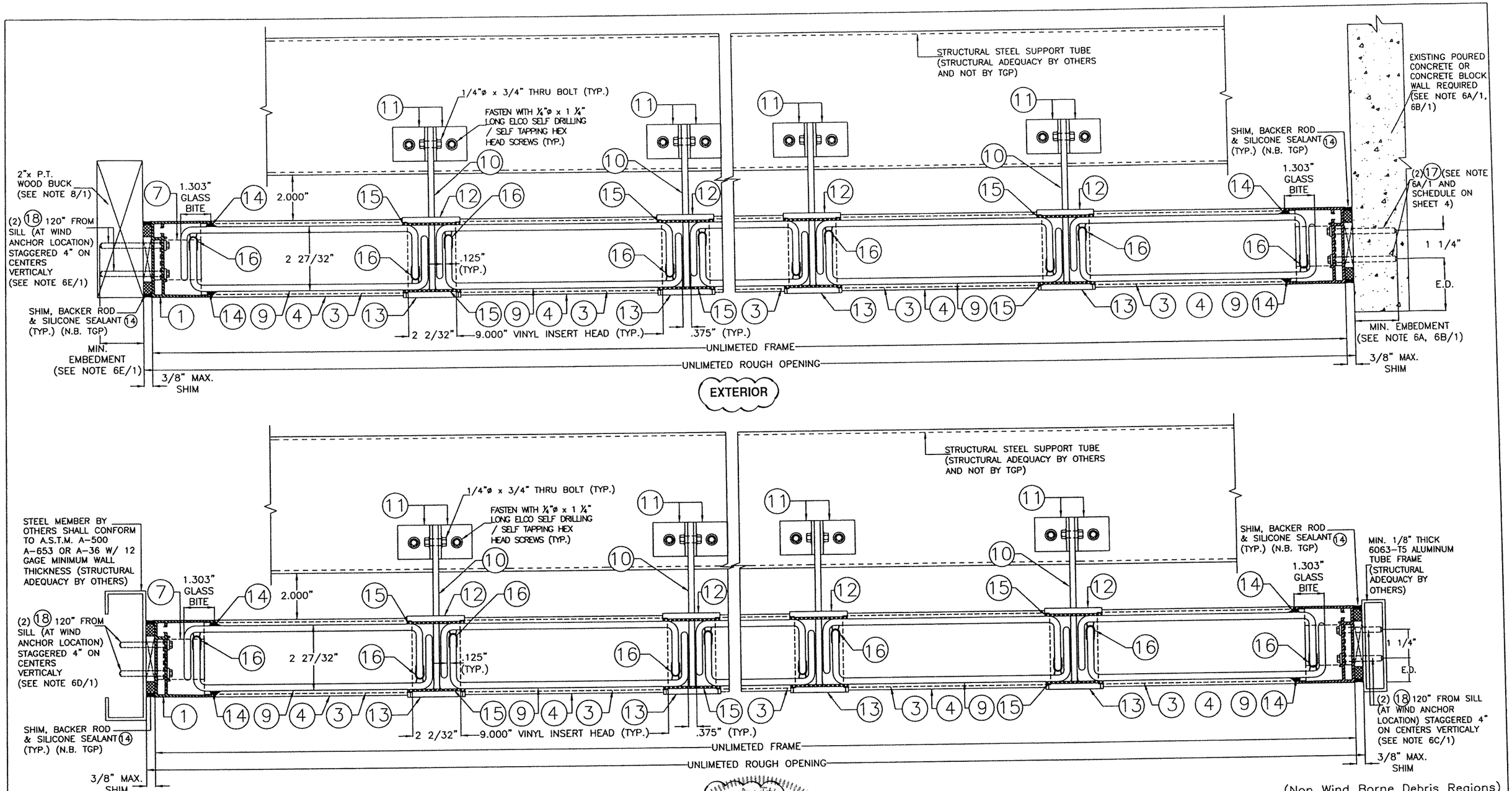

SECTION C-C

SCALE: 1/4" = 1"

(Non Wind Borne Debris Regions)
Florida Building Code (Non High Velocity Hurricane Zone)

WALTER A. TILLIT JR. LICENSE No. 44167 STATE OF FLORIDA PROFESSIONAL ENGINEER

7/14/2023

P.E. SEAL/SIGNATURE/DATE

© 2023 TILTECO INC.

TILTECO INC.
TILLIT TESTING & ENGINEERING COMPANY
6355 N.W. 36th. St., Ste. 305, VIRGINIA GARDENS, FL 33166
Phone : (305)871-1530 . Fax : (305)871-1531
e-mail: tilteco@aol.com
CA-0006719
WALTER A. TILLIT Jr. P.E.
FLORIDA Lic. # 44167

DOUBLE SPAN PROFILIT™ K25/60/7, GLAZING WALL SYSTEM

Technical Glass Products
8107 Bracken PL SE
Snoqualmie, WA 98065-9258
Phone: 1-800-426-0279
(425) 822-4514
Fax: 1-800-451-9857
(425) 822-4684

REV. No	DESCRIPTION	DATE	REV. No	DESCRIPTION	DATE
1	OLD 20-257	7/14/23	3		
2	–	–			

DRAWN BY Y.M.

7/14/2023 DATE

23-091 DRAWING No

SHEET 8 OF 19

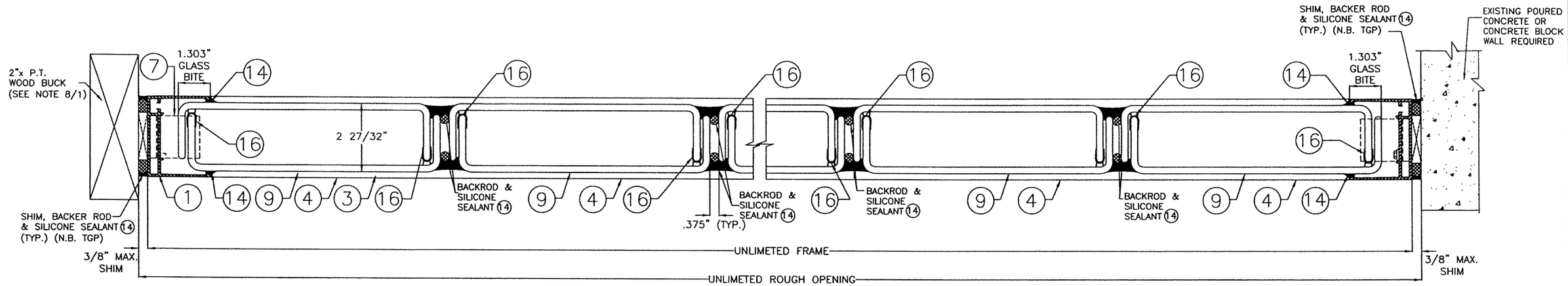

EXTERIOR

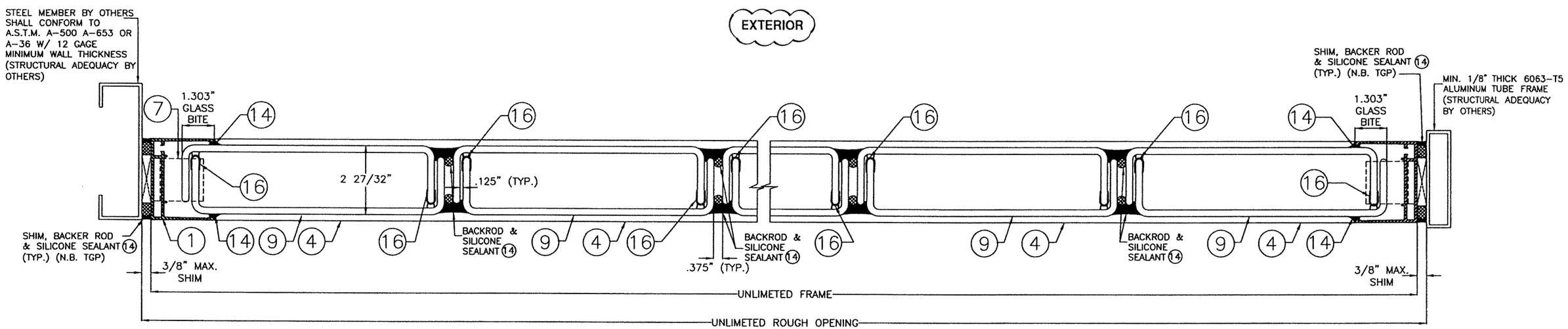

EXTERIOR

SECTIONS D-D

SCALE: 1/4" = 1"

(Non Wind Borne Debris Regions)
Florida Building Code (Non High Velocity Hurricane Zone)

WALTER A. TILLIT JR. LICENSE No. 44167 STATE OF FLORIDA PROFESSIONAL ENGINEER

7/14/2023

P.E. SEAL/SIGNATURE/DATE

© 2023 TILTECO INC.

TILTECO INC.
TILLIT TESTING & ENGINEERING COMPANY
6355 N.W. 36th. St. Ste. 305, VIRGINIA GARDENS, FL 33166
Phone : (305)871-1530 . Fax : (305)871-1531
e-mail: tilteco@aol.com
CA-0006719
WALTER A. TILLIT Jr. P.E.
FLORIDA Lic. # 44167

DOUBLE SPAN PROFILIT™ K25/60/7,
GLAZING WALL SYSTEM

Technical Glass Products
8107 Bracken PL SE
Snoqualmie, WA 98065-9258
Phone: 1-800-426-0279
(425) 822-4514
Fax: 1-800-451-9857
(425) 822-4684

REV. No	DESCRIPTION	DATE	REV. No	DESCRIPTION	DATE
1	OLD 20-257	7/14/23	3		
2	-	-			

DRAWN BY
Y.M.

7/14/2023
DATE

23-091
DRAWING No

SHEET 9 OF 19

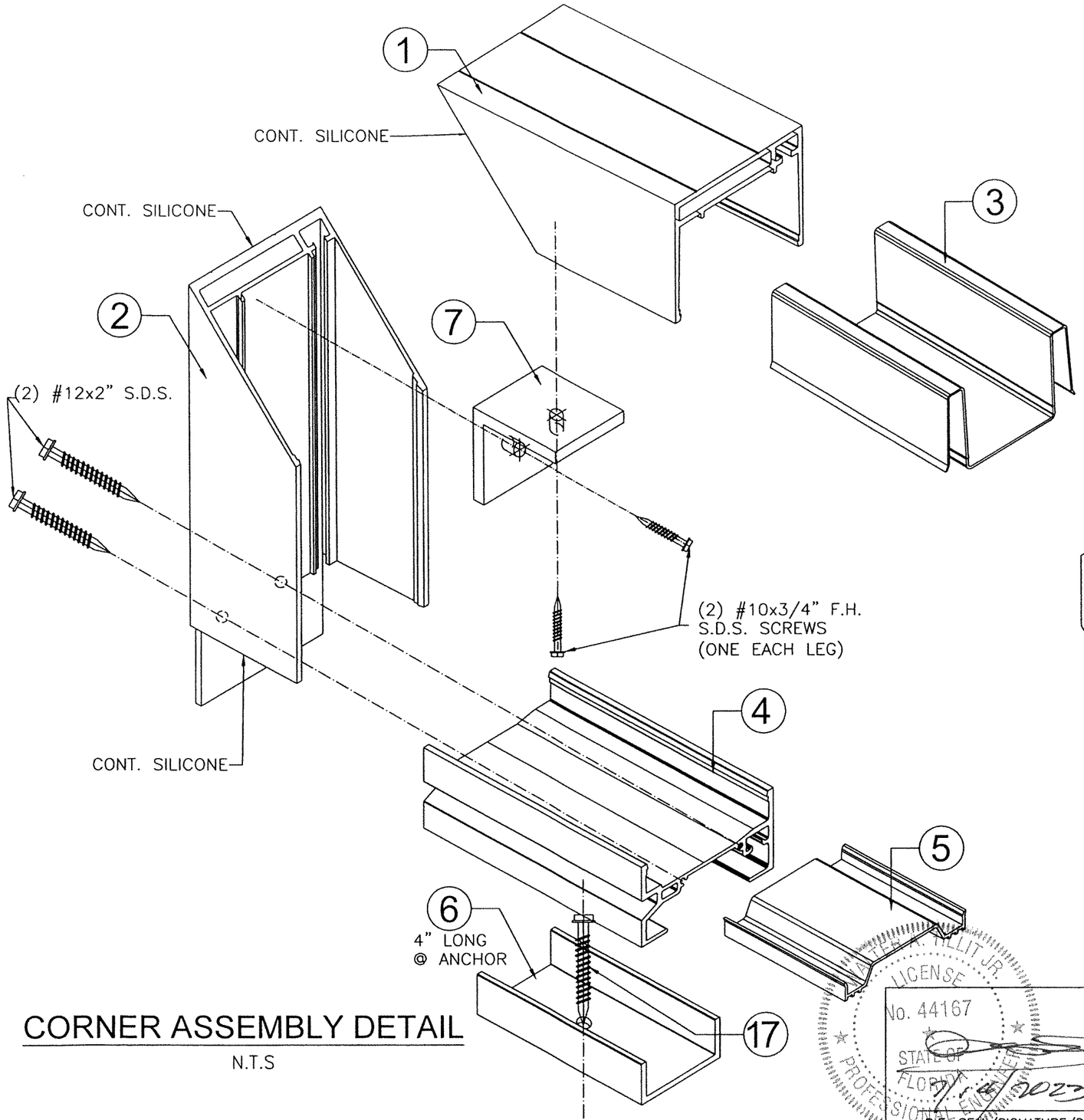

CORNER ASSEMBLY DETAIL

N.T.S

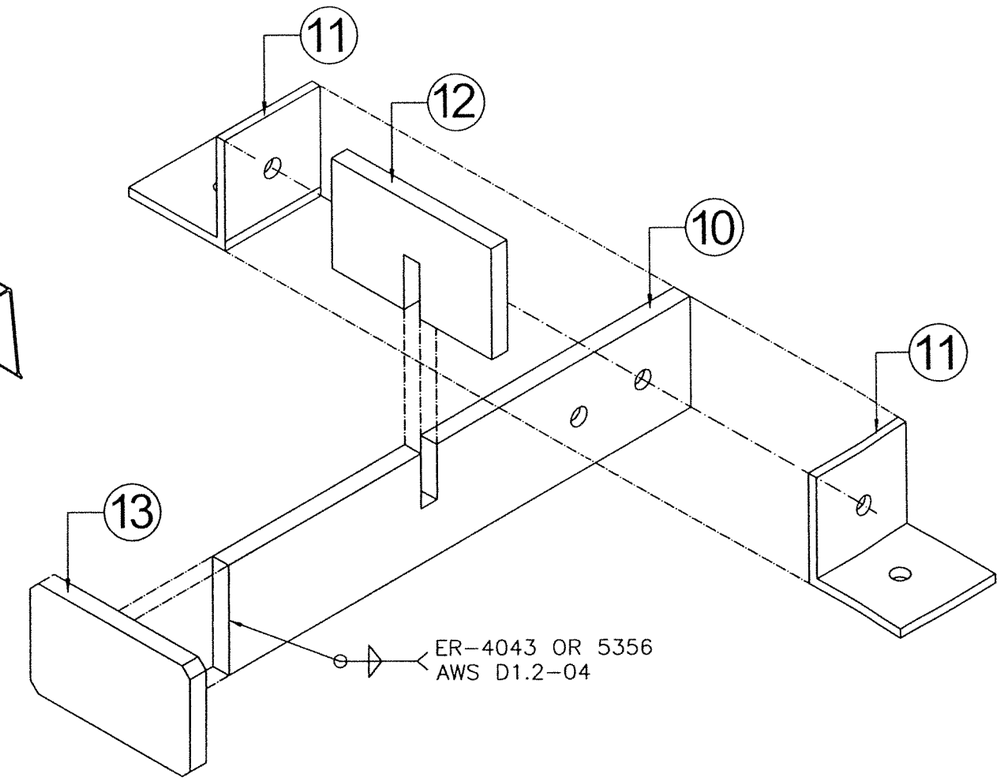

ASSEMBLY WIND ANCHOR

N.T.S

(Non Wind Borne Debris Regions)
Florida Building Code (Non High Velocity Hurricane Zone)

WALTER A. TILLIT JR. LICENSE No. 44167 STATE OF FLORIDA PROFESSIONAL ENGINEER

7/14/2023

P.E. SEAL/SIGNATURE/DATE

© 2023 TILTECO INC.

TILTECO INC.
TILLIT TESTING & ENGINEERING COMPANY
6355 N.W. 36th. St., Ste. 305, VIRGINIA GARDENS, Fl. 33166
Phone : (305)871-1530 . Fax : (305)871-1531
e-mail: tilteco@aol.com
CA-0006719
WALTER A. TILLIT Jr. P.E.
FLORIDA Lic. # 44167

DOUBLE SPAN PROFILIT™ K25/60/7,
GLAZING WALL SYSTEM

Technical Glass Products
8107 Bracken PL SE
Snoqualmie, WA 98065-9258
Phone: 1-800-426-0279
(425) 822-4514
Fax: 1-800-451-9857
(425) 822-4684

REV. No	DESCRIPTION	DATE	REV. No	DESCRIPTION	DATE
1	OLD 20-257	7/14/23	3		
2	–	–			

DRAWN BY
Y.M.

7/14/2023
DATE

23-091
DRAWING No

SHEET 10 OF 19

GENERAL NOTES AND SPECIFICATIONS FOR SINGLE SPAN GLAZING WALL SYSTEM:

1. SINGLE SPAN PROFILIT™ K25/60/7 GLAZING WALL SYSTEM, SHOWN ON THIS PRODUCT EVALUATION DOCUMENT (P.E.D.) HAS BEEN VERIFIED FOR COMPLIANCE IN ACCORDANCE WITH THE **2023 (8th EDITION)** OF THE FLORIDA BUILDING CODE. SINGLE SPAN PROFILIT™ K25/60/7 GLAZING WALL SYSTEM SHALL NOT BE INSTALLED AT HIGH VELOCITY HURRICANE ZONES (MIAMI DADE/BROWARD COUNTY), NOR SHALL BE INSTALLED WITHIN WIND-BORNE DEBRIS REGIONS AS DEFINED BY **SECTION 202** OF THE FLORIDA BUILDING CODE.

   DESIGN WIND LOADS SHALL BE DETERMINED AS PER SECTION 1609 OF THE ABOVE MENTIONED CODE. FOR A BASIC WIND SPEED AS REQUIRED BY THE JURISDICTION WHERE GLAZING WALL WILL BE INSTALLED WITH A DIRECTIONALITY FACTOR KD=0.85, USING **ASCE 7-22** & SHALL NOT EXCEED THE MAXIMUM (A.S.D.) DESIGN PRESSURE RATING INDICATED ON NOTE 1.
   IN ORDER TO VERIFY THE ABOVE CONDITION, ULTIMATE DESIGN WIND LOADS DETERMINED PER **ASCE 7-22** SHALL BE FIRST REDUCED TO A.S.D. DESIGN WIND LOADS BY MULTIPLYING THEM BY 0.6 IN ORDER TO COMPARE THESE W/ MAX. (A.S.D.) DESIGN PRESSURE RATING INDICATED ON NOTE 1.

   IN ORDER TO VERIFY THAT ANCHORS ON THIS P.E.D., AS TESTED, WERE NOT OVERSTRESSED, A 33% INCREASE IN ALLOWABLE STRESS FOR WIND LOADS WAS NOT USED IN THEIR ANALYSIS. FASTENERS SPACING TO WOOD HAS BEEN DETERMINED IN ACCORDANCE WITH N.D.S. 2018. THIS SINGLE SPAN PROFILIT TM K25/60/7 GLAZING WALL SYSTEM'S ADEQUACY FOR WIND LOAD RESISTANCE HAS BEEN VERIFIED IN ACCORDANCE WITH SECTIONS **1709.5.2 & AAMA 501 (PER SECTION 1709.8.4)** OF THE ABOVE MENTIONED CODE AS PER ASTM E-330 STANDARD AS PER ARCHITECTURAL TESTING LAB REPORTS **# 76844.01-501-44 AND 76844.02-501-44** AND AS PER SUBMITTED STRUCTURAL CALCULATIONS, PERFORMED AS PER SECTION 1604 OF THE FLORIDA BUILDING CODE. SINGLE SPAN PROFILIT™ K25/60/7 GLAZING WALL SYSTEM IS ALSO VERIFIED FOR WATER AND AIR INFILTRATION AND FORCED ENTRY AS PER ASTM E-547, E-331, E-283 STANDARDS, RESPECTIVELY, PER SECTION 1403.2 OF THE FLORIDA BUILDING CODE. GLASS VERIFIED PER ASTM E-1300, PER SECTION 2404.1 OF THE FLORIDA BUILDING CODE.

MAX. A.S.D. DESIGN PRESSURE RATING:	+ 40, - 40 p.s.f. WITH ANNEALED GLAZING + 70, - 70 p.s.f. WITH TEMPERED GLAZING

2. ALL ALUMINUM EXTRUSIONS SHALL BE ALUMINUM ASSOCIATION 6063-T5 ALLOY AND TEMPER (UNLESS OTHERWISE NOTED), PER ASTM B221, WITH Fy = 16.0 ksi MINIMUM. THE THICKNESS OF ALL EXTRUSIONS SHALL BE AS SHOWN ON THIS DRAWING.

3. TEMPERED & ANNEALED GLASS TO COMPLY WITH 16CFR 1201.

4. ALL ALUMINUM IN CONTACT WITH DISSIMILAR METALS SHALL COMPLY WITH SECTION III-6 OF THE 2020 ALUMINUM DESIGN MANUAL.

5. ALL INTERNAL SCREWS USED FOR ASSEMBLY AT HEAD, SILL AND FRAME JAMBS CONNECTIONS (METAL TO METAL) TO BE AISI STAINLESS STEEL 304 OR 316 AISI SERIES OR CORROSION RESISTANT COATED CARBON STEEL AS PER DIN 50018 WITH MINIMUM 50 KSI YIELD STRENGTH AND 90 KSI TENSILE STRENGTH & SHALL COMPLY W/ FLORIDA BUILDING CODE SECTION 2411.3.3.4.

6. ANCHORS FOR FRAME CONNECTION TO EXISTING STRUCTURE SHALL BE AS FOLLOWS: (SEE TYPICAL ELEVATION ON SHEET 14 FOR ALLOWED SUBSTRATES)

   (A) TO EXISTING POURED CONCRETE: (MIN. F'C = 2899 PSI)
   - 5/16"ø TAPCON ANCHORS W/ 2 1/4" MIN. EMBEDMENT BEYOND ANY WALL/SLAB FINISH MATERIAL & MIN. 3 1/8" EDGE DISTANCE, AS MANUFACTURED BY ITW. BUILDEX, INC.

   (B) TO EXISTING CONCRETE BLOCK WALL: (MIN. ASTM C-90 UNIT)
   - 5/16"ø TAPCON ANCHORS W/ 1 1/4" MIN. EMBEDMENT BEYOND ANY WALL/SLAB FINISH MATERIAL & MIN. 3 1/8" EDGE DISTANCE, AS MANUFACTURED BY ITW BUILDEX, INC.

   (C) TO EXISTING ALUMINUM (6063-T5 ALLOY), 1/8" MIN. THICKNESS:
   - 5/16"øX3" DRILL-FLEX, INC. & MIN. 3/4" EDGE DISTANCE AS MANUFACTURED BY ELCO CONSTRUCTION PRODUCTS.

   (D) TO EXISTING MIN. 12 GAGE STEEL MEMBER (ASTM A-500, A-653 OR A-36).
   - 5/16"øX3" DRILL-FLEX & MIN. 1" EDGE DISTANCE AS MANUFACTURED BY ELCO CONSTRUCTION PRODUCTS.

   (E) TO EXISTING 2X P.T. WOOD BUCK (G=0.55).
   - 5/16"ø TAPCON WITH 1 1/2" MIN. PENETRATION & MIN. 1 1/4" EDGE DISTANCE, AS MANUFACTURED BY ITW BUILDEX, INC.

7. ANCHORS SHALL BE INSTALLED FOLLOWING ALL OF THE RECOMMENDATIONS AND SPECIFICATIONS OF THE ANCHOR'S MANUFACTURER.

8. WOOD BUCKS BY OTHERS, MUST BE ANCHORED PROPERLY TO TRANSFER LOADS TO THE BUILDING STRUCTURE. WOOD BUCKS MUST BE SOUTHERN PINE, G = 0.55.

9. SINGLE SPAN PROFILIT™ K25/60/7 GLAZING WALL SYSTEM INSTALLATION SHALL ONLY BE PERFORMED INTO EXISTING STRUCTURE CONSISTING OF POURED CONCRETE, CONCRETE BLOCK WALL, 1/8" Min. THICK ALUMINUM, 12 GAGE STEEL OR WOOD FRAME STRUCTURE AND SHALL COMPLY WITH SECTION 2411.3.3.3 OF THE FLORIDA BUILDING CODE AND WITH SPECS INDICATED IN THIS DRAWING PLUS ANY BUILDING AND ZONING REGULATIONS PROVIDED BY THE JURISDICTION WHERE PERMIT IS APPLIED TO.

10. PROVIDE 3/8" MAX. BEARING SHIM SPACE (TYP.).

11. PROVIDE DOW 795 SEALANT (TYP.) AT ALL FRAME AND GLASS JOINTS.

12. REMAINING COMPONENTS FOR THIS SINGLE SPAN PROFILIT™ K25/60/7 GLAZING WALL SYSTEM SHALL BE AS INDICATED ON BILL OF MATERIALS, SHEET 13 OF THIS DRAWING.

13. THIS SYSTEM IS PATENT PENDING. COMPONENTS OF THIS APPROVAL ARE COVERED, IN WHOLE OR IN PART BY U.S. PATENT ISSUED TO TECHNICAL GLASS PRODUCTS.

14. SINGLE SPAN PROFILIT™ K25/60/7 GLAZING WALL SYSTEM'S INSTALLATION SHALL COMPLY WITH SPECS INDICATED IN THIS DRAWING PLUS ANY BUILDING AND ZONING REGULATIONS PROVIDED BY THE JURISDICTION WHERE PERMIT IS APPLIED TO.

15. PRODUCT MANUFACTURER'S LABEL SHALL BE LOCATED ON A READILY VISIBLE LOCATION. IN ACCORDANCE WITH SECTION 1709.5 OF FLORIDA BUILDING CODE.
    ONE LABEL SHALL BE PLACED FOR EVERY OPENING.

16. (A) THIS PRODUCT EVALUATION DOCUMENT (P.E.D.) PREPARED BY THIS ENGINEER IS GENERIC AND DOES NOT PROVIDE INFORMATION FOR A SITE SPECIFIC PROJECT; I. E. WHERE THE SITE CONDITIONS DEVIATE FROM THE P.E.D.

    (B) CONTRACTOR TO BE RESPONSIBLE FOR THE SELECTION, PURCHASE AND INSTALLATION INCLUDING LIFE SAFETY OF THIS PRODUCT, BASED ON THIS PRODUCT EVALUATION DOCUMENT (P.E.D.), PROVIDED HE/SHE DOES NOT DEVIATE FROM THE CONDITIONS DETAILED ON THIS DOCUMENT. CONSTRUCTION SAFETY AT SITE IS THE CONTRACTOR'S RESPONSIBILITY.

    (C) THIS PRODUCT EVALUATION DOCUMENT (P.E.D.) WILL BE CONSIDERED INVALID IF ALTERED BY ANY MEANS.

    (D) SITE SPECIFIC PROJECTS SHALL BE PREPARED BY A FLORIDA REGISTERED ENGINEER OR ARCHITECT WHICH WILL BECOME THE ENGINEER OF RECORD (E.O.R.) FOR THE PROJECT AND WHO WILL BE RESPONSIBLE FOR THE PROPER USE OF THE P.E.D. ENGINEER OF RECORD, ACTING AS A DELEGATED ENGINEER TO THE P.E.D. ENGINEER, SHALL SUBMIT TO THIS LATTER THE SITE SPECIFIC DRAWINGS FOR REVIEW.

    (E) THIS P.E.D. SHALL BEAR THE DATE AND ORIGINAL SEAL AND SIGNATURE OF THE PROFESSIONAL ENGINEER OF RECORD THAT PREPARED IT.

WALTER A. TILLIT JR. LICENSE No. 44167 STATE OF FLORIDA PROFESSIONAL ENGINEER

7/14/2023

P.E. SEAL/SIGNATURE/DATE

(Non Wind Borne Debris Regions)
Florida Building Code (Non High Velocity Hurricane Zone)

© 2023 TILTECO INC.

TILTECO INC.
TILLIT TESTING & ENGINEERING COMPANY
6355 N.W. 36th. St., Ste. 305, VIRGINIA GARDENS, Fl. 33166
Phone : (305)871-1530 . Fax : (305)871-1531
e-mail: tilteco@aol.com
CA-0006719
WALTER A. TILLIT Jr. P.E.
FLORIDA Lic. # 44167

DOUBLE SPAN PROFILIT™ K25/60/7, GLAZING WALL SYSTEM

Technical Glass Products
8107 Bracken PL SE
Snoqualmie, WA 98065-9258
Phone: 1-800-426-0279
(425) 822-4514
Fax: 1-800-451-9857
(425) 822-4684

REV. No	DESCRIPTION	DATE	REV. No	DESCRIPTION	DATE
1	OLD 20-257	7/14/23	3		
2	-	-			

DRAWN BY Y.M.

7/14/2023 DATE

23-091 DRAWING No

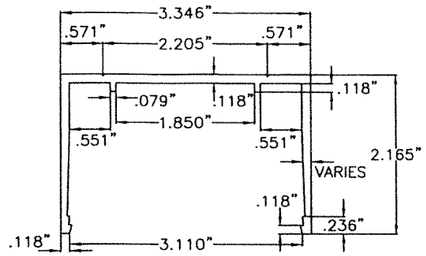

1 HEADER & JAMB
(6063-T5 ALLOY)
980-WT

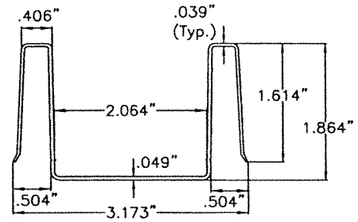

2 HEADER & JAMB (AS APPLICABLE)
VINYL INSERT
(6063-T5 ALLOY)
980-2

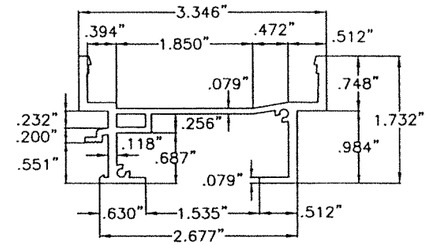

3 SILL
(6063-T5 ALLOY)
981

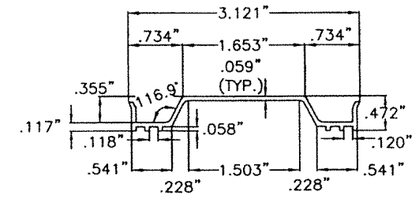

4 SILL VINYL INSERT
P.N. 981-2

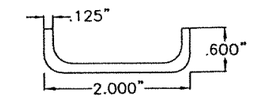

5 6" LONG "U" CHANNEL
@ SILL ANCHOR
(5005-H32 ALLOY)

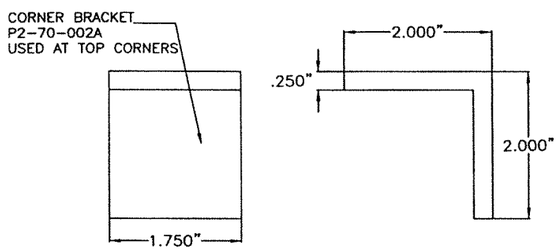

6 TOP CORNER BRACKET
(6063-T5 ALLOY)
P2-70-002A

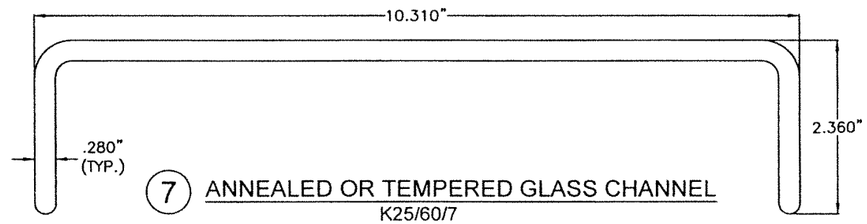

7 ANNEALED OR TEMPERED GLASS CHANNEL
K25/60/7

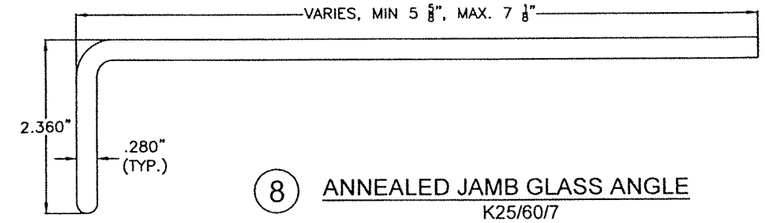

8 ANNEALED JAMB GLASS ANGLE
K25/60/7

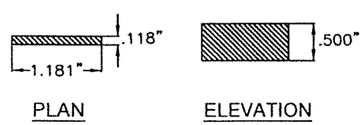

9 VINYL GLASS SHIM
PN41-044 VINYL

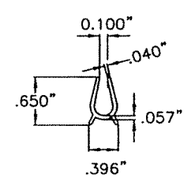

13 GASKET
166-WC

COMPONENTS FOR SINGLE SPAN SYSTEM

SCALE: 1/2" = 1"

(Non Wind Borne Debris Regions)
Florida Building Code (Non High Velocity Hurricane Zone)

WALTER A. TILLIT JR. LICENSE No. 44167 STATE OF FLORIDA PROFESSIONAL ENGINEER

7/14/2023

P.E. SEAL/SIGNATURE/DATE

© 2023 TILTECO INC.

TILTECO INC.
TILLIT TESTING & ENGINEERING COMPANY
6355 N.W. 36th. St., Ste. 305, VIRGINIA GARDENS, Fl. 33166
Phone : (305)871-1530 . Fax : (305)871-1531
e-mail: tilteco@aol.com
CA-0006719
WALTER A. TILLIT Jr. P.E.
FLORIDA Lic. # 44167

DOUBLE SPAN PROFILIT™ K25/60/7,
GLAZING WALL SYSTEM

Technical Glass Products
8107 Bracken PL SE
Snoqualmie, WA 98065-9258
Phone: 1-800-426-0279
(425) 822-4514
Fax: 1-800-451-9857
(425) 822-4684

REV. No	DESCRIPTION	DATE	REV. No	DESCRIPTION	DATE
1	OLD 20-257	7/14/23	3		
2	–	–			

DRAWN BY
Y.M.

7/14/2023
DATE

23-091
DRAWING No

SHEET 12 OF 19

BILL OF MATERIALS FOR SINGLE SPAN GLAZING WALL SYSTEM

ITEM	DESCRIPTION	MATERIAL / MANUFACTURER	REMARKS
1	HEADER & JAMB	6063–T5 ALUMINUM ALLOY	980–WT
2	HEADER VINYL INSERT	AAMA APPROVED VINYL BY CUSTOM WINDOW EXTRUSIONS INC. OR KARL PETER KUNSTSTOFFE GMBH.	980–2 AT HEAD: PIECES OF 8 3/4" LONG W/ 1 3/4" SEPARATION AT CHANNEL GLASS 7 JOINTS TO FIT (2) 9 THROUGHOUT AT JAMBS: CONTINUOUS, AND REQUIRED ONLY FOR ANNEALED GLASS JOINTLY W/ 8
3	SILL	6063–T5 ALUMINUM ALLOY	981 PROVIDE 1/2"x1/4" WEEP HOLES AT 36" O.C.
4	SILL INSERT	AAMA APPROVED VINYL BY CUSTOM WINDOW EXTRUSIONS INC. OR KARL PETER KUNSTSTOFFE GMBH.	991 WTR–2 PIECES OF 8 3/4" LONG W/ 1 3/4" SEPARATION AT CHANNEL GLASS JOINTS TO FIT (2) 9 THROUGHOUT
5	6" LONG "U' CHANNEL	5005–H32 ALUMINUM ALLOY	PIECES OF 6" LONG, PLACED ON CENTER OF ANCHORS AT SILL
6	CORNER BRACKET	6063–T5 ALUMINUM ALLOY	2" x 2" x 0.25" x 1.75" LONG ALUM. ANGLE, PLACED AT EACH TOP CORNER
7	CHANNEL GLASS	0.28" THK. ANNEALED GLASS ASTM C 1036, TYPE 1, CLASS 1, QUALITY q3, ROLLED GLASS, ANGLE SHAPE, CAST OR 0.28" THICK STANDARD CAST TEMPERED GLASS TYPE 1, CLASS 1, ROLLED GLASS, CHANNEL SHAPE	K25/60/7 SERIES GLASS (USED ALSO AT JAMBS FOR TEMPERED GLASS)
8	JAMB ANGLE GLASS	0.28" THK. ANNEALED GLASS ASTM C 1036, TYPE 1, CLASS 1, QUALITY q3, ROLLED GLASS, ANGLE SHAPE, CAST OR 0.28" THICK STANDARD CAST TEMPERED GLASS TYPE 1, CLASS 1, ROLLED GLASS, CHANNEL SHAPE	K25/60/7 SERIES GLASS THIS COMPONENT IS REQUIRED AT JAMBS FOR ANNEALED GLASS
9	VINYL GLASS SHIM	AAMA APPROVED VINYL BY CUSTOM WINDOW EXTRUSIONS INC. OR KARL PETER KUNSTSTOFFE GMBH.	P.N. 41–044 USE DOUBLE @ FRONT & BACK AT TOP/BOTTOM AT CHANNEL GLASS 7 & 8 JOINTS
10	SILICONE SEALANT	DOW CORNING 795	AT GLASS & FRAME
11	5/16"ø TAPCON ANCHOR	ITW BUILDEX	SEE SCHEDULE FOR ANCHOR SPACING ON SHEET 14 AND GENERAL NOTES 5A/1, 5B/1 AND 5E/1, AT CONCRETE OR WOOD SILL AND HEAD, AT CONCRETE, CONCRETE BLOCK OR WOOD JAMBS. START AT 3" FROM ENDS.
12	5/16"ø DRILL–FLEX SELF–DRILLING FASTENERS	ELCO CONSTRUCTION PRODUCTS.	SEE SCHEDULE FOR ANCHOR SPACING ON SHEET 14 AND GENERAL NOTES 5C/1, AND 5D/1, AT METAL JAMBS OR HEAD, START AT 3" FROM ENDS.
13	GASKET	BUNZL EXTRUSION TACOMA, INC.	166–WC USE (2) PER EACH 7 OR 8 JOINT FLEXIBLE PVC

(Non Wind Borne Debris Regions)
Florida Building Code (Non High Velocity Hurricane Zone)

WALTER A. TILLIT JR. LICENSE No 44167 STATE OF FLORIDA PROFESSIONAL ENGINEER

7/14/2023

P.E. SEAL/SIGNATURE/DATE

© 2023 TILTECO INC.

TILTECO INC.
TILLIT TESTING & ENGINEERING COMPANY
6355 N.W. 36th. St., Ste. 305, VIRGINIA GARDENS, FL 33166
Phone : (305)871–1530 . Fax : (305)871–1531
e–mail: tilteco@aol.com
CA–0006719
WALTER A. TILLIT Jr. P.E.
FLORIDA Lic. # 44167

DOUBLE SPAN PROFILIT™ K25/60/7, GLAZING WALL SYSTEM

Technical Glass Products
8107 Bracken PL SE
Snoqualmie, WA 98065-9258
Phone: 1-800-426-0279
(425) 822-4514
Fax: 1-800-451-9857
(425) 822-4684

REV. No	DESCRIPTION	DATE	REV. No	DESCRIPTION	DATE
1	OLD 20–257	7/14/23	3		
2	–	–			

DRAWN BY Y.M.

7/14/2023 DATE

23–091 DRAWING No

SHEET 13 OF 19

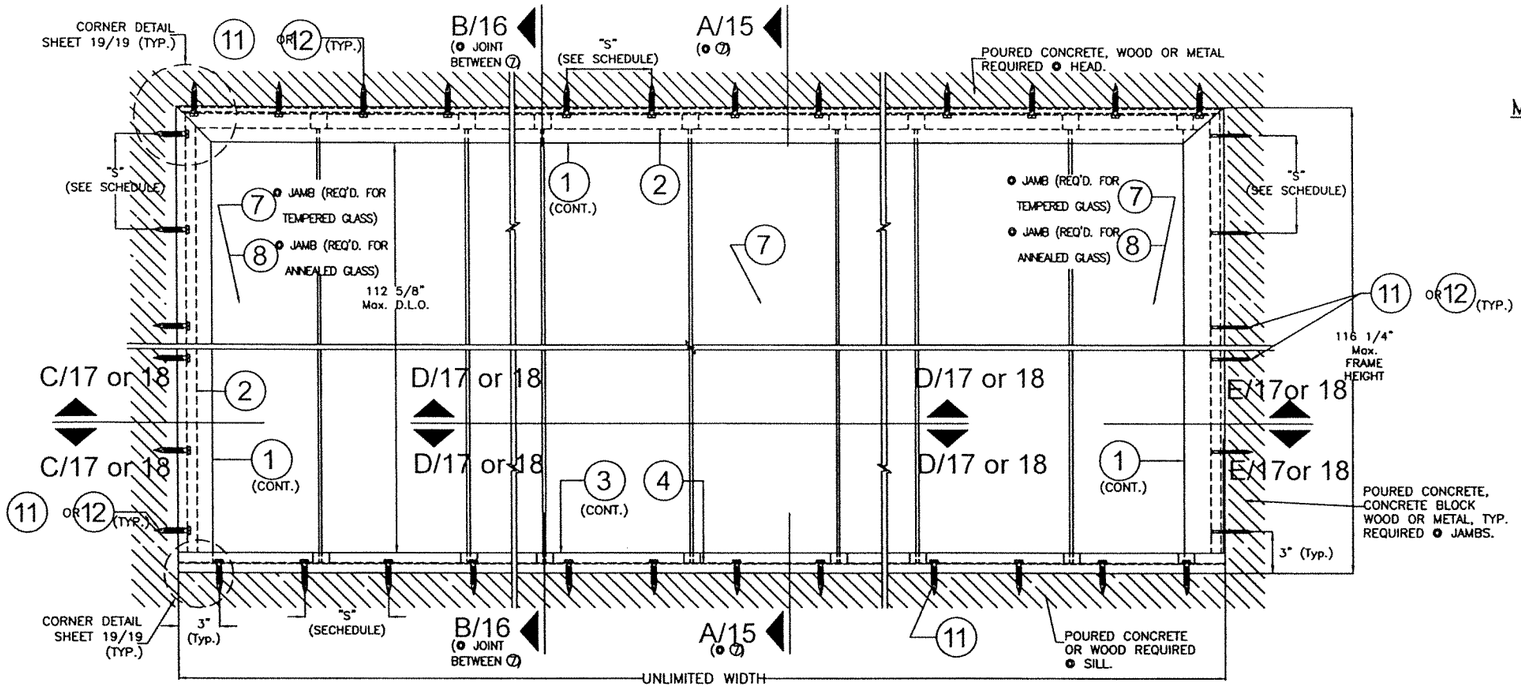

TYPICAL EXTERIOR ELEVATION FOR SINGLE SPAN GLAZING SYSTEM

SCALE: N.T.S.

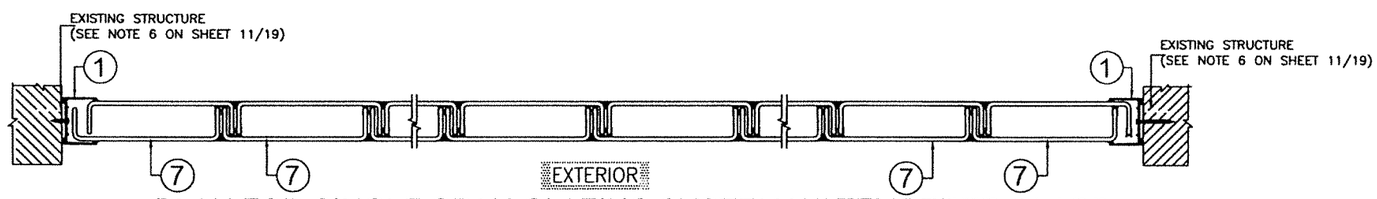

PLAN FOR SINGLE SPAN GLAZING SYSTEM W/ TEMPERED GLASS

SCALE: N.T.S.

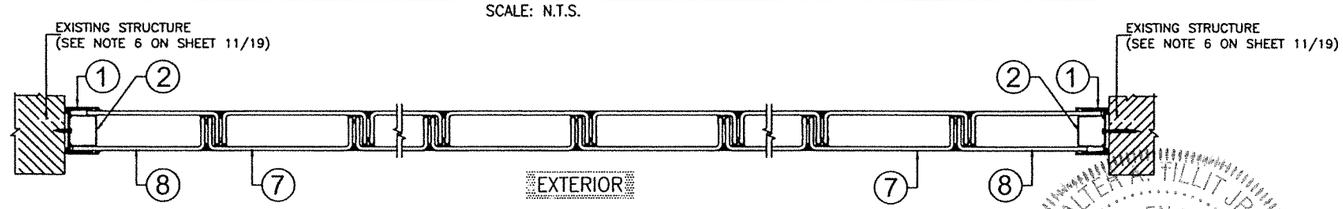

PLAN FOR SINGLE SPAN GLAZING SYSTEM W/ ANNELAED GLASS

SCALE: N.T.S.

MAXIMUM ANCHOR SPACING "S" SCHEDULE FOR ANNEALED GLASS

SUBSTRATE	ANCHOR TYPE	MAX. A.S.D. DESIGN PRESSURE RATING (PSF)	HEAD	SILL	JAMB
CONCRETE (SEE NOTE 6A/11)	5/16"ø TAPCON 11	+40, −40 p.s.f.	11" O.C.	7" O.C.	18" O.C.
BLOCK WALL (SEE NOTE 6B/11)	5/16"ø TAPCON 11		11" O.C.	N/A	18" O.C.
METAL (SEE NOTE 6C/11 & 6D/11)	5/16"ø−24 x 3" DRILL−FLEX 12		11" O.C.	N/A	18" O.C.
WOOD (SEE NOTE 6E/11)	5/16"ø TAPCON 11		6 1/2" O.C.	6" O.C.	18" O.C.

MAXIMUM ANCHOR SPACING "S" SCHEDULE FOR TEMPERED GLASS

SUBSTRATE	ANCHOR TYPE	MAX. A.S.D. DESIGN PRESSURE RATING (PSF)	HEAD	SILL	JAMB
CONCRETE (SEE NOTE 6A/11)	5/16"ø TAPCON 11	+50, −50 p.s.f.	9" O.C.	5" O.C.	18" O.C.
BLOCK WALL (SEE NOTE 6B/11)	5/16"ø TAPCON 11		9" O.C.	N/A	18" O.C.
METAL (SEE NOTE 6C/11 & 6D/11)	5/16"ø−24 x 3" DRILL−FLEX 12		9" O.C.	N/A	18" O.C.
WOOD (SEE NOTE 6E/11)	5/16"ø TAPCON 11		5" O.C.	5" O.C.	18" O.C.
CONCRETE (SEE NOTE 6A/11)	5/16"ø TAPCON 11	+70, −70 p.s.f.	6" O.C.	4" O.C.	18" O.C.
BLOCK WALL (SEE NOTE 6B/11)	5/16"ø TAPCON 11		6" O.C.	N/A	18" O.C.
METAL (SEE NOTE 6C/11 & 6D/11)	5/16"ø−24 x 3" DRILL−FLEX 12		6" O.C.	N/A	18" O.C.
WOOD (SEE NOTE 6E/11)	5/16"ø TAPCON 11		3 1/2" O.C.	4" O.C.	18" O.C.

(Non Wind Borne Debris Regions)
Florida Building Code (Non High Velocity Hurricane Zone)

WALTER A. TILLIT JR. LICENSE No. 44167 STATE OF FLORIDA PROFESSIONAL ENGINEER

7/14/2023

P.E. SEAL/SIGNATURE/DATE

© 2023 TILTECO INC.

TILTECO INC.
TILLIT TESTING & ENGINEERING COMPANY
6355 N.W. 36th. St., Ste. 305, VIRGINIA GARDENS, Fl. 33166
Phone : (305)871−1530 . Fax : (305)871−1531
e−mail: tilteco@aol.com
CA−0006719
WALTER A. TILLIT Jr. P.E.
FLORIDA Lic. # 44167

DOUBLE SPAN PROFILIT™ K25/60/7, GLAZING WALL SYSTEM

Technical Glass Products
8107 Bracken PL SE
Snoqualmie, WA 98065-9258
Phone: 1-800-426-0279
(425) 822-4514
Fax: 1-800-451-9857
(425) 822-4684

REV. No	DESCRIPTION	DATE	REV. No	DESCRIPTION	DATE
1	OLD 20−257	7/14/23	3		
2	−	−			

DRAWN BY Y.M.

7/14/2023 DATE

23−091 DRAWING No

SHEET 14 OF 19

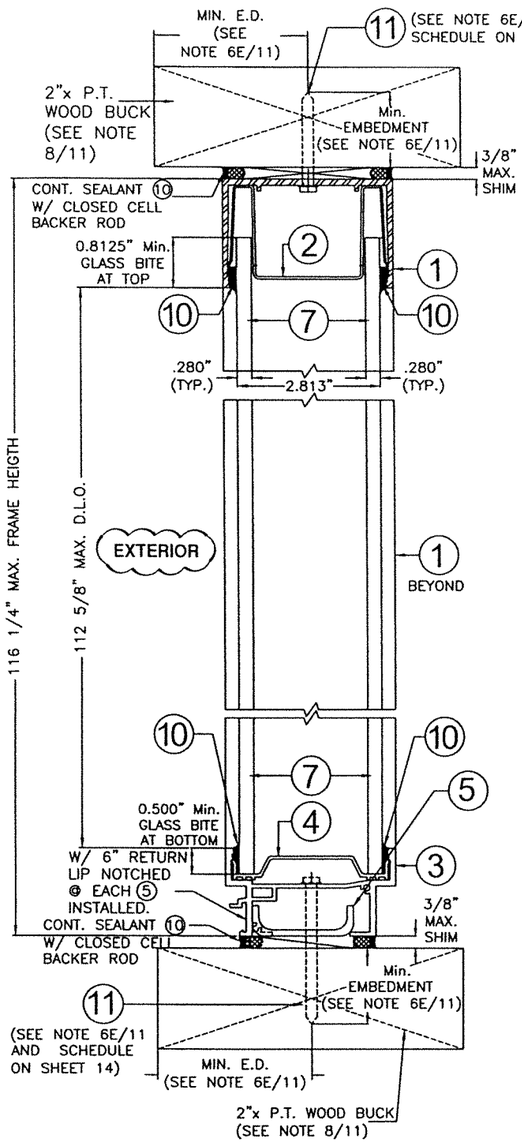

SECTION A-A
(TO WOOD)
SCALE: 3/8" = 1"

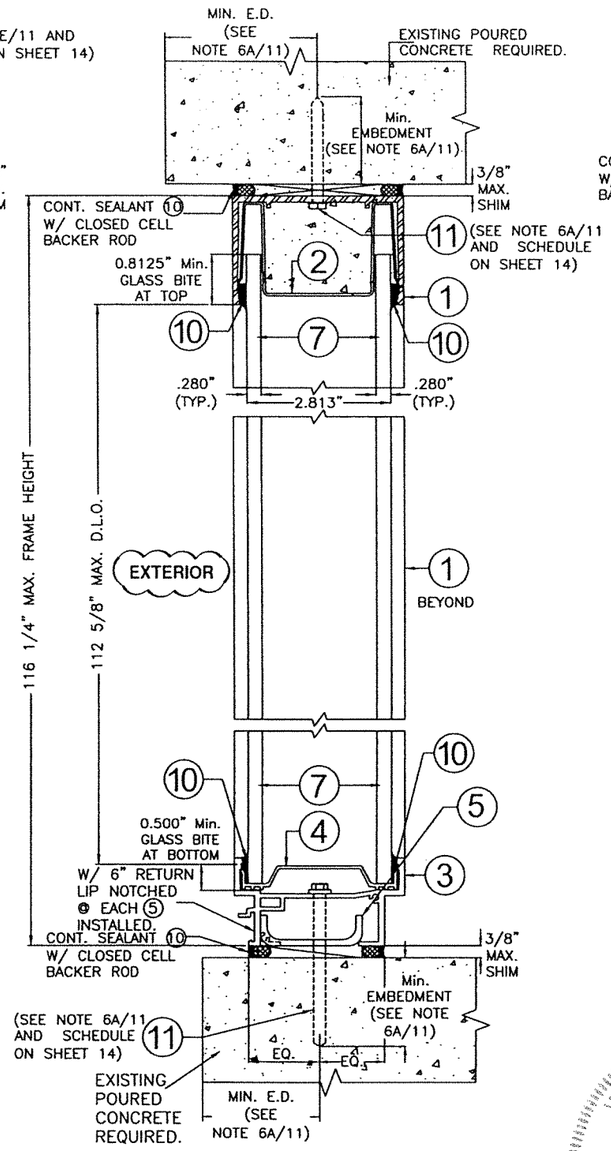

SECTION A-A
(TO POURED CONCRETE)
SCALE: 3/8" = 1"

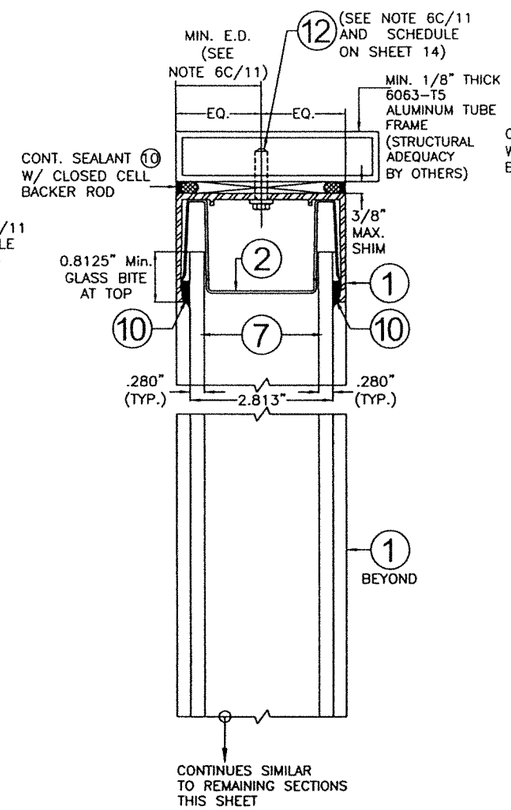

SECTION A-A
(TO ALUMINUM MULLION)
SCALE: 3/8" = 1"

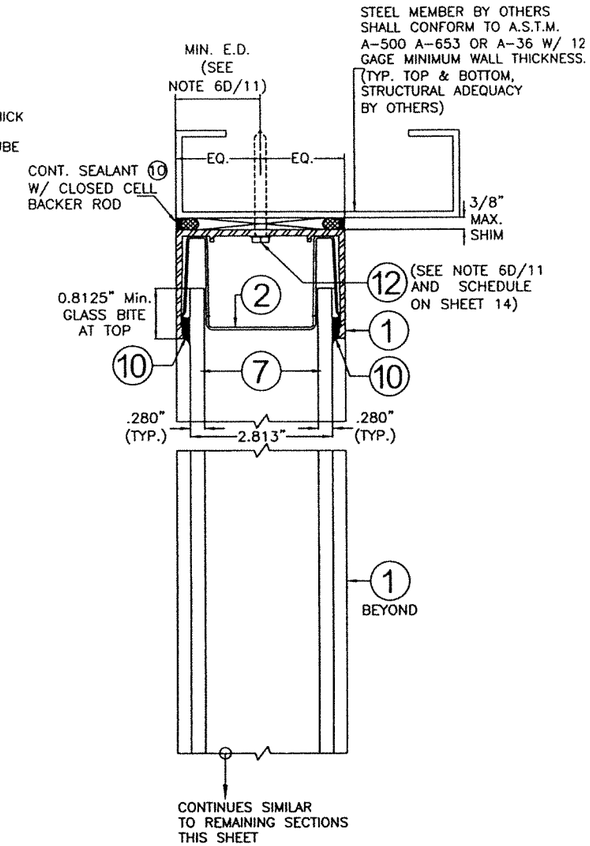

SECTION A-A
(TO STEEL MEMBER)
SCALE: 3/8" = 1"

WALTER A. TILLIT JR. LICENSE No. 44167 STATE OF FLORIDA PROFESSIONAL ENGINEER

7/14/2023

P.E. SEAL/SIGNATURE/DATE

(Non Wind Borne Debris Regions)
Florida Building Code (Non High Velocity Hurricane Zone)

© 2023 TILTECO INC.

TILTECO INC.
TILLIT TESTING & ENGINEERING COMPANY
6355 N.W. 36th. St., Ste. 305, VIRGINIA GARDENS, Fl. 33166
Phone : (305)871-1530 . Fax : (305)871-1531
e-mail: tilteco@aol.com
CA-0006719
WALTER A. TILLIT Jr. P.E.
FLORIDA Lic. # 44167

DOUBLE SPAN PROFILIT™ K25/60/7, GLAZING WALL SYSTEM

Technical Glass Products
8107 Bracken PL SE
Snoqualmie, WA 98065-9258
Phone: 1-800-426-0279
(425) 822-4514
Fax: 1-800-451-9857
(425) 822-4684

REV. No	DESCRIPTION	DATE	REV. No	DESCRIPTION	DATE
1	OLD 20-257	7/14/23	3		
2	–	–			

DRAWN BY: Y.M.
DATE: 7/14/2023
DRAWING No: 23-091
SHEET 15 OF 19

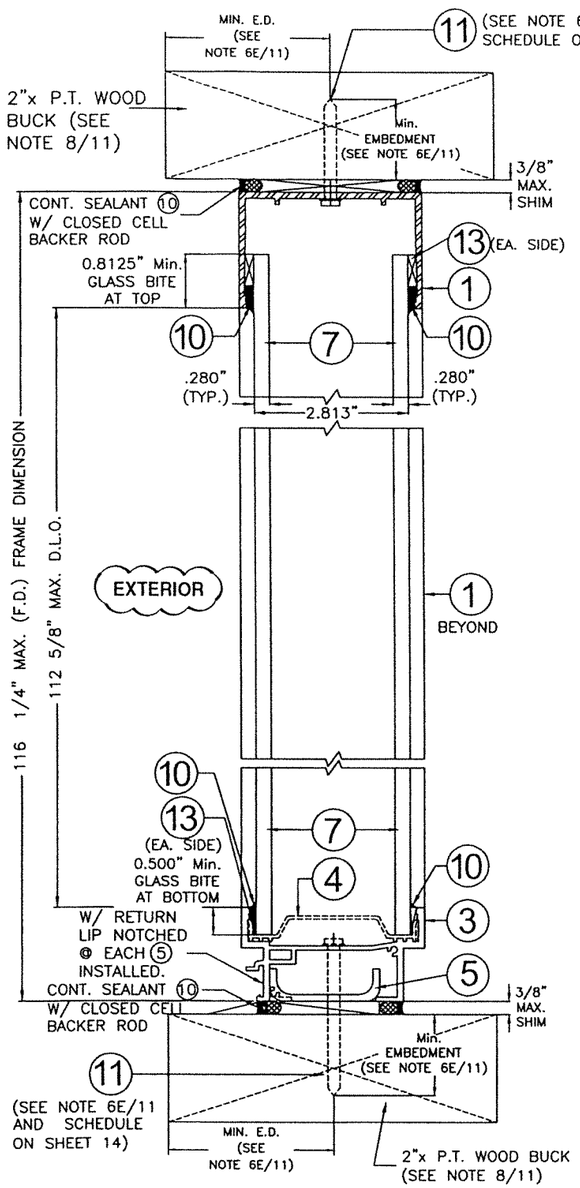

SECTION B-B (TO WOOD)

AT JOINTS

SCALE: 3/8" = 1"

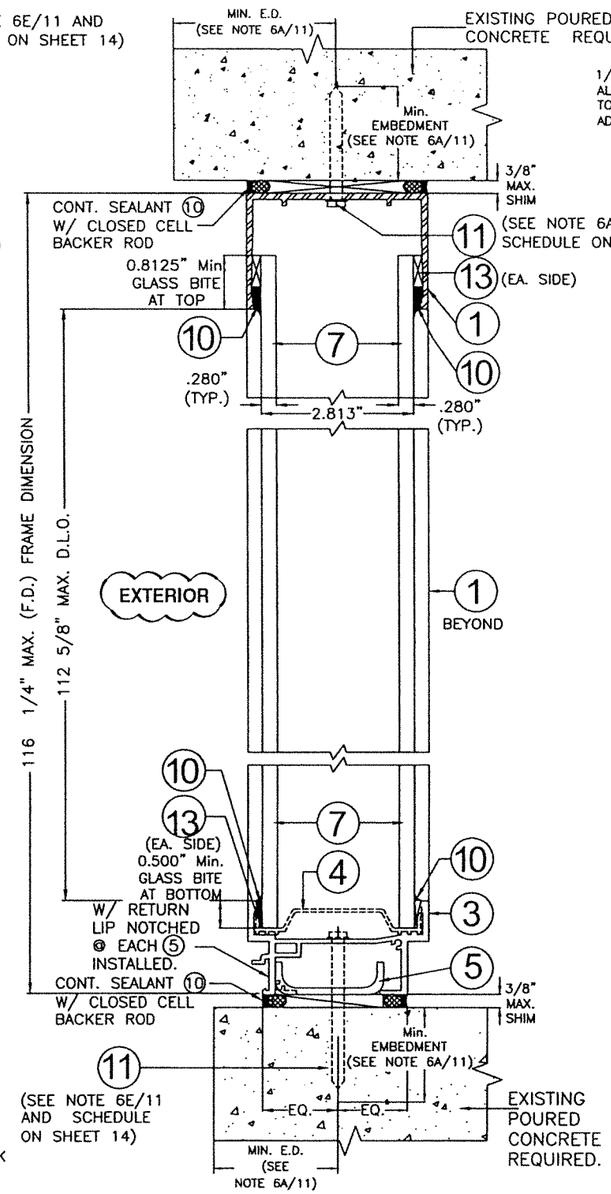

SECTION B-B (TO POURED CONCRETE)

AT JOINTS

SCALE: 3/8" = 1"

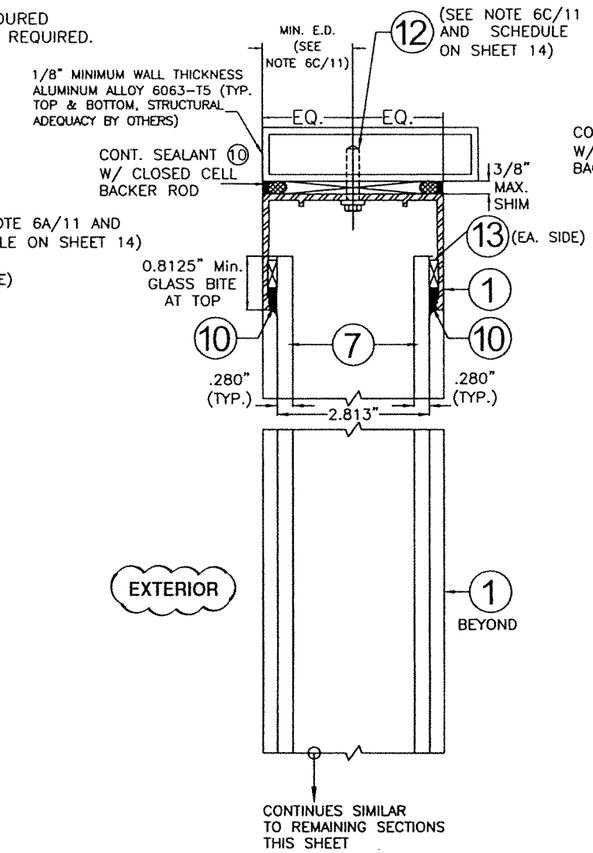

SECTION B-B (TO TOP ONLY) (TO ALUMINUM MULLION)

AT JOINTS

SCALE: 3/8" = 1"

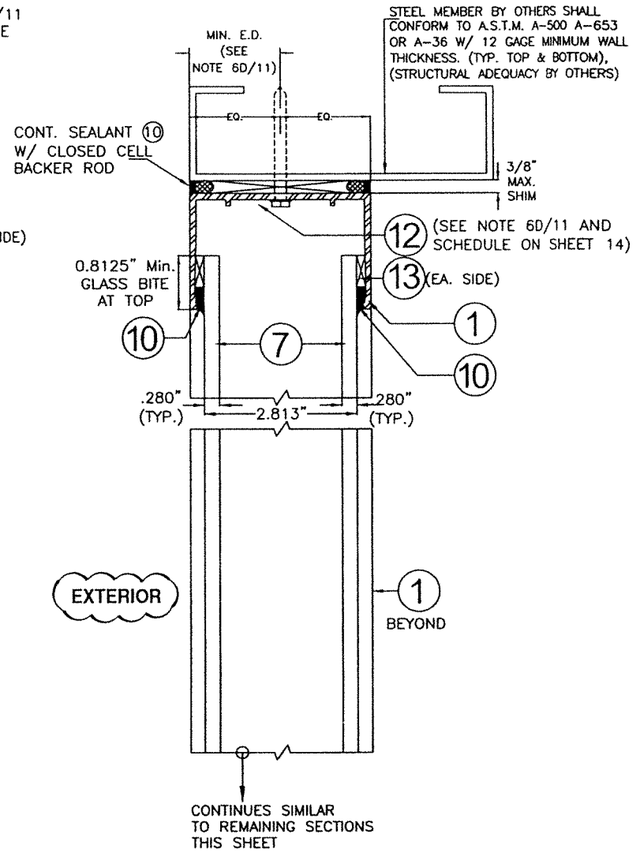

SECTION B-B (TO TOP ONLY) (TO STEEL MEMBER)

AT JOINTS

SCALE: 3/8" = 1"

(Non Wind Borne Debris Regions)
Florida Building Code (Non High Velocity Hurricane Zone)

WALTER A. TILLIT JR. LICENSE No. 44167 STATE OF FLORIDA PROFESSIONAL ENGINEER

7/14/2023

P.E. SEAL/SIGNATURE/DATE

© 2023 TILTECO INC.

TILTECO INC.
TILLIT TESTING & ENGINEERING COMPANY
6355 N.W. 36th. St., Ste. 305, VIRGINIA GARDENS, FL 33166
Phone : (305)871-1530 . Fax : (305)871-1531
e-mail: tilteco@aol.com
CA-0006719
WALTER A. TILLIT Jr. P.E.
FLORIDA Lic. # 44167

DOUBLE SPAN PROFILIT™ K25/60/7, GLAZING WALL SYSTEM

Technical Glass Products
8107 Bracken PL SE
Snoqualmie, WA 98065-9258
Phone: 1-800-426-0279
(425) 822-4514
Fax: 1-800-451-9857
(425) 822-4684

REV. No	DESCRIPTION	DATE	REV. No	DESCRIPTION	DATE
1	OLD 20-257	7/14/23	3		
2	–	–			

DRAWN BY Y.M.

7/14/2023 DATE

23-091 DRAWING No

SHEET 16 OF 19

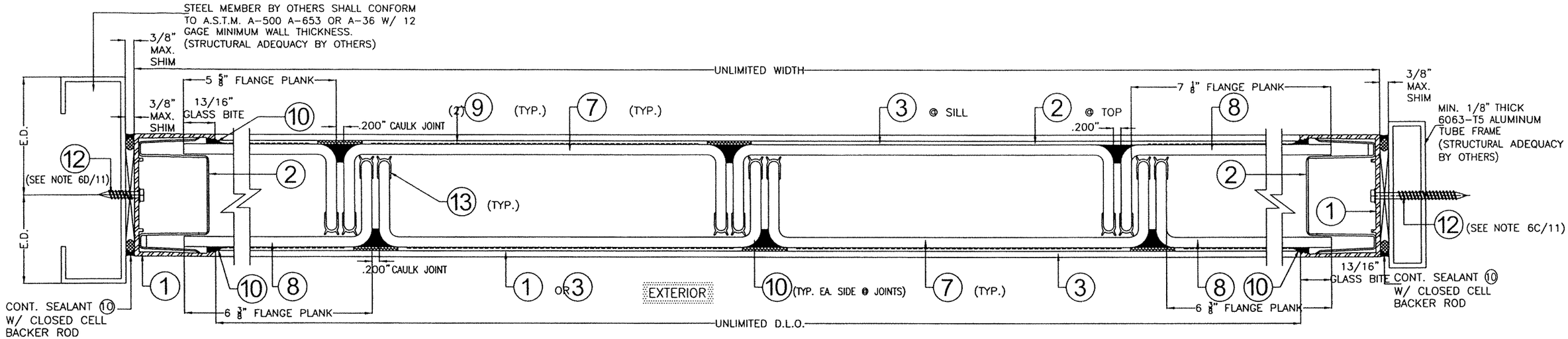

SECTION C
(REQUIRED FOR ANNEALED GLASS)
SCALE: 3/8" = 1"

SECTION D
(REQUIRED FOR ANNEALED GLASS)
SCALE: 3/8" = 1"

SECTION E
(REQUIRED FOR ANNEALED GLASS)
SCALE: 3/8" = 1"

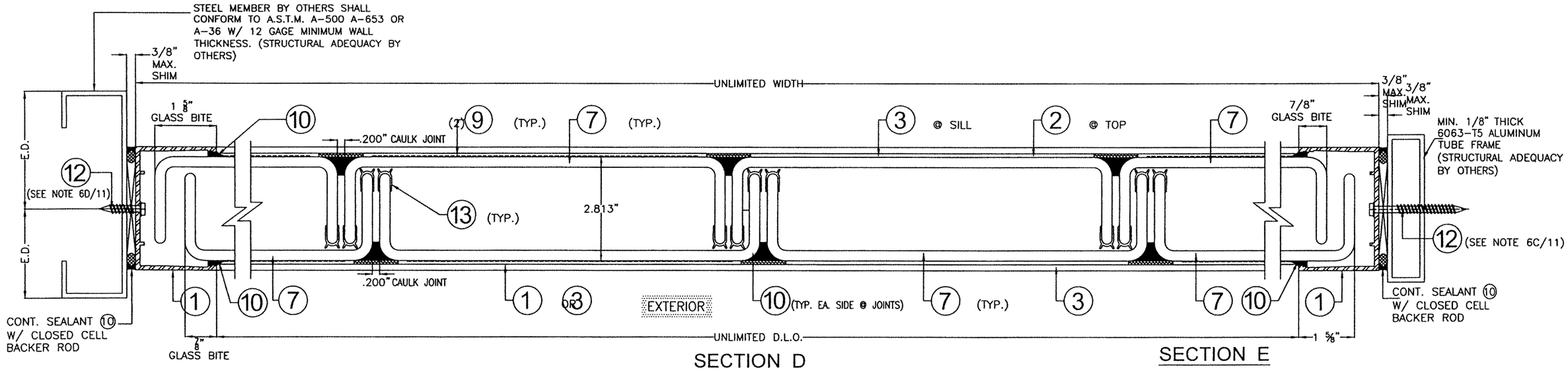

SECTION C
(REQUIRED FOR TEMPERED GLASS)
SCALE: 3/8" = 1"

SECTION D
(REQUIRED FOR TEMPERED GLASS)
SCALE: 3/8" = 1"

SECTION E
(REQUIRED FOR TEMPERED GLASS)
SCALE: 3/8" = 1"

(Non Wind Borne Debris Regions)
Florida Building Code (Non High Velocity Hurricane Zone)

WALTER A. TILLIT JR. LICENSE No. 44167 STATE OF FLORIDA PROFESSIONAL ENGINEER

7/14/2023
P.E. SEAL/SIGNATURE/DATE

© 2023 TILTECO INC.

TILTECO INC.
TILLIT TESTING & ENGINEERING COMPANY
6355 N.W. 36th. St., Ste. 305, VIRGINIA GARDENS, Fl. 33166
Phone : (305)871-1530 . Fax : (305)871-1531
e-mail: tilteco@aol.com
CA-0006719
WALTER A. TILLIT Jr. P.E.
FLORIDA Lic. # 44167

DOUBLE SPAN PROFILIT™ K25/60/7, GLAZING WALL SYSTEM

Technical Glass Products
8107 Bracken PL SE
Snoqualmie, WA 98065-9258
Phone: 1-800-426-0279
(425) 822-4514
Fax: 1-800-451-9857
(425) 822-4684

REV. No	DESCRIPTION	DATE	REV. No	DESCRIPTION	DATE
1	OLD 20-257	7/14/23	3		
2	-	-			

DRAWN BY Y.M.

7/14/2023 DATE

23-091 DRAWING No

SHEET 17 OF 19

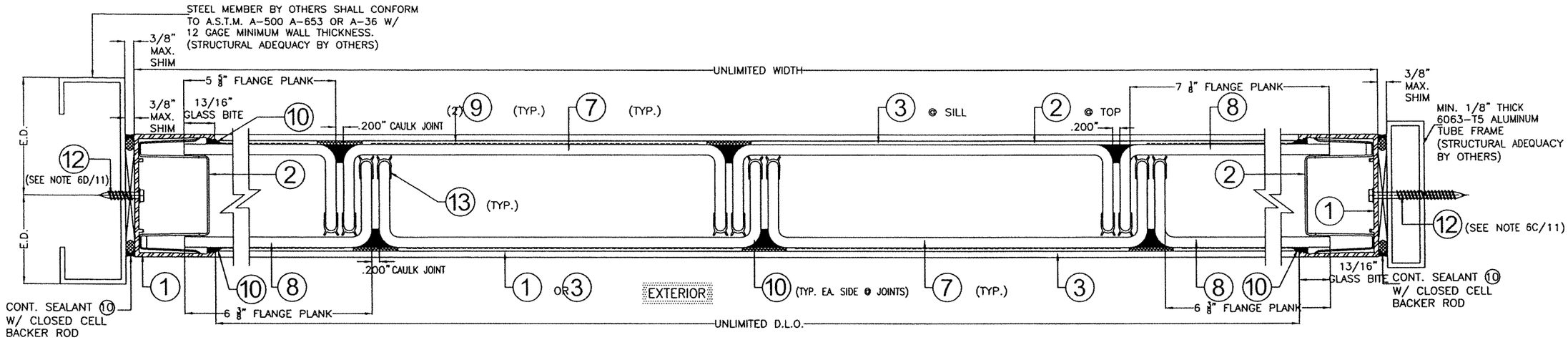

SECTION C
(REQUIRED FOR ANNEALED GLASS)
SCALE: 3/8" = 1"

SECTION D
(REQUIRED FOR ANNEALED GLASS)
SCALE: 3/8" = 1"

SECTION E
(REQUIRED FOR ANNEALED GLASS)
SCALE: 3/8" = 1"

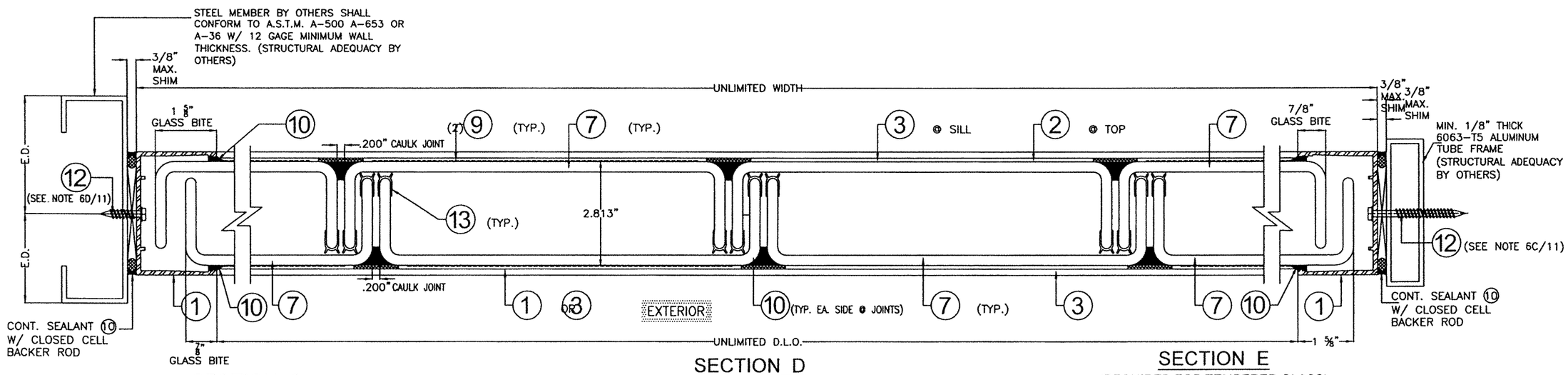

SECTION C
(REQUIRED FOR TEMPERED GLASS)
SCALE: 3/8" = 1"

SECTION D
(REQUIRED FOR TEMPERED GLASS)
SCALE: 3/8" = 1"

SECTION E
(REQUIRED FOR TEMPERED GLASS)
SCALE: 3/8" = 1"

(Non Wind Borne Debris Regions)
Florida Building Code (Non High Velocity Hurricane Zone)

WALTER A. TILLIT JR. LICENSE No. 44167 STATE OF FLORIDA PROFESSIONAL ENGINEER

P.E. SEAL/SIGNATURE/DATE

© 2023 TILTECO INC.

TILTECO INC.
TILLIT TESTING & ENGINEERING COMPANY
6355 N.W. 36th. St., Ste. 305, VIRGINIA GARDENS, Fl. 33166
Phone : (305)871-1530 . Fax : (305)871-1531
e-mail: tilteco@aol.com
CA-0006719
WALTER A. TILLIT Jr. P.E.
FLORIDA Lic. # 44167

DOUBLE SPAN PROFILIT™ K25/60/7, GLAZING WALL SYSTEM

Technical Glass Products
8107 Bracken PL SE
Snoqualmie, WA 98065-9258
Phone: 1-800-426-0279
(425) 822-4514
Fax: 1-800-451-9857
(425) 822-4684

REV. No	DESCRIPTION	DATE	REV. No	DESCRIPTION	DATE
1	OLD 20-257	7/14/23	3		
2	–	–			

DRAWN BY Y.M.

7/14/2023 DATE

23-091 DRAWING No

SHEET 18 OF 19

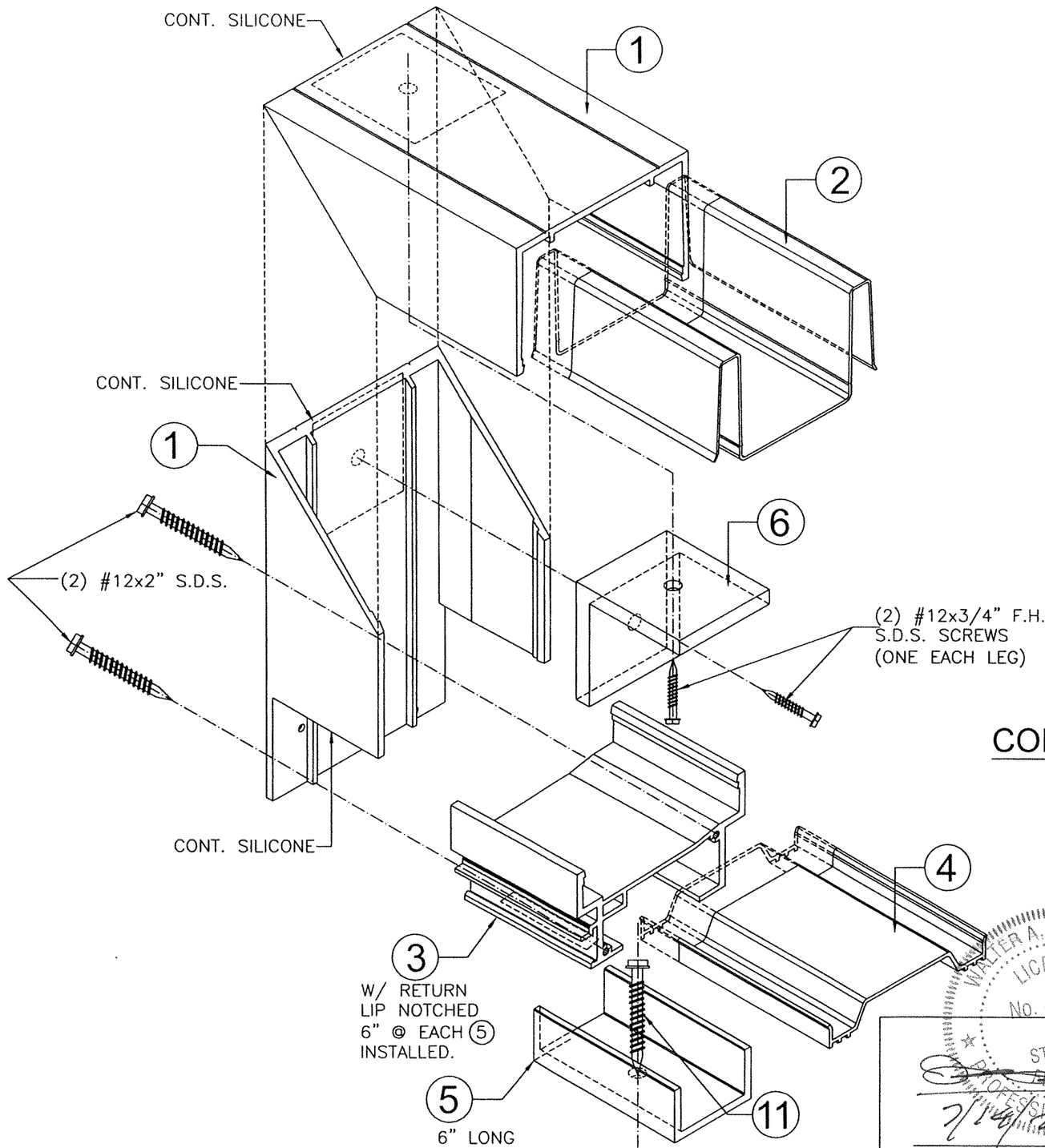

CORNER ASSEMBLY DETAIL

N.T.S

(Non Wind Borne Debris Regions)
Florida Building Code (Non High Velocity Hurricane Zone)

WALTER A. TILLIT JR. LICENSE No. 44167 STATE OF FLORIDA PROFESSIONAL ENGINEER

7/14/2023

P.E. SEAL/SIGNATURE/DATE

© 2023 TILTECO INC.

TILTECO INC.
TILLIT TESTING & ENGINEERING COMPANY
6355 N.W. 36th. St., Ste. 305, VIRGINIA GARDENS, FL 33166
Phone : (305)871-1530 . Fax : (305)871-1531
e-mail: tilteco@aol.com
CA-0006719
WALTER A. TILLIT Jr. P.E.
FLORIDA Lic. # 44167

DOUBLE SPAN PROFILIT™ K25/60/7,
GLAZING WALL SYSTEM

Technical Glass Products
8107 Bracken PL SE
Snoqualmie, WA 98065-9258
Phone: 1-800-426-0279
(425) 822-4514
Fax: 1-800-451-9857
(425) 822-4684

REV. No	DESCRIPTION	DATE	REV. No	DESCRIPTION	DATE
1	OLD 20-257	7/14/23	3		
2	–	–			

DRAWN BY
Y.M.

7/14/2023
DATE

23-091
DRAWING No

SHEET 19 OF 19